7th Framework Programme

INFSO-ICT 285285

V2G Interoperability Testing Framework

Deliverable n.	6.2	V2G Interoperability Testing Framework	
Workpackage	6	Conformance and Interoperability Testing	
Editors	Miguel Ángel Reina Ortega (ETSI)		
Authors	Jakó Zoltán (BroadBit) Andras Kovacs (BroadBit) Miguel Ángel Reina Ortega (ETSI) Antonio Plaza Ortega (ETSI)		
Status	Final		
Distribution	Public (PU)		
Issue date	2013-02-12	Creation date	2012-10-08
European Commission Information Society and Media	Project co-funded by the European Commission DG-Information Society and Media in the 7th Framework Programme		SEVENTH FRAMEWORK PROGRAMME

TABLE OF CONTENTS

LIST OF ABBREVIATIONS

ABBREVIATION	DESCRIPTION
A-V2G	Automotive V2G controller
BMS	Battery Management System
EUT	Equipment Under Test
EVCC	Electric Vehicle Communication Controller.
HPGP	HomePlug Green PHY
IUT	Implementation Under Test
I-V2G	Infrastructure V2G controller
LBC	Load Balancing Controller
MAC	Medium Access Control
PLC	Power Line Communication
SDP	SECC Discovery Protocol
SECC	Supply Equipment Communication Controller.
SUT	System Under Test
TCP	Transmission Control Protocol
TD	Test Description
UDP	User Datagram Protocol
V2G	Vehicle to Grid
V2GTP	Vehicle to Grid Transfer protocol
WP	WorkPackage

LIST OF FIGURES

LIST OF TABLES

REVISION CHART AND HISTORY LOG

REV	DATE	REASON
1	2012-10-08	First draft (Table of content)
2	2012-10-14	First Test descriptions, test cases from BB
3	2012-11-20	Modifications on interoperability tests, inserting value added service and DC charging tests. Modifications in introduction text and references.
4	2012-12-21	Final Draft
5	2013-02-04	Update from peer review

EXECUTIVE SUMMARY

Nowadays, the user needs are changing rapidly and generate new challenges for the current and future communication systems, and this is why current communication systems are becoming more and more complex. Therefore, this complexity as well as other factors put, to some extent, barriers to achieving interoperability; and from a consumers point of view, this becomes a must.

With the aim of getting such interoperability, standardization is considered crucial for getting the interoperability in a multi-vendor, multi-network and multi-service environment. Once the standards are defined, and even during the definition of such a standard, prototypes, and finally products, are developed based on these standards. However, the interpretation of these standards could be different, and this is why different products from different manufacturers are sometimes not able to interoperate each other. To help to avoid misinterpretations, testing is an essential tool for ensuring interoperability, firstly defining a robustness test methodology, secondly specifying a complete set of test specifications, and finally developing test tools for being used to test products tested.

The purpose of this deliverable is the development of an interoperability testing framework for Vehicle to Grid (V2G) interface, mainly based on the standard ISO/IEC 15118-2 [1] and PowerUp architecture [7] specified in WP3, which can be used for further interoperability test specification development.

The deliverable is arranged in 6 chapters:

- Chapter 1 gives an introduction of Interoperability testing.
- Chapter 2 provides the steps for the interoperability testing framework.
- Chapter 3 presents the equipment Under tests identified in PowerUp and the survey of the demo stories.
- Chapter 4 deals with the Test bed architecture given for PowerUp. This section contains the test configurations.
- Chapter 5 presents the mandatory and optionally interoperability tests for PowerUp.
- Finally, Chapter 6 concludes the deliverable.

1. INTRODUCTION

Interoperability is always one of the main challenges of any standardized technology. A definition of interoperability testing is the "ability" of two or more systems or components to exchange and use information.

Interoperability testing is usually considered as the next step in the logical process of the testing cycle. Essentially Interoperability may be viewed from two perspectives:

- For a manufacturer, this is the activity of proving that end-to-end functionality between (at least) two communicating systems is as required by those systems' base standards.
- For a consumer, interoperability means the ability to acquire the relevant terminal device and begin to use it with another device implementing the same technology.

The purpose of interoperability testing is not only to show that products from different manufacturers can work together but also to show that these products can interoperate using a specific protocol. In certain situations some limited conformance testing with extensive interoperability testing may be sufficient.

Multi-vendor compatibility is crucial for the success of V2G technology, so that the recharging of any fully electric vehicle brand could be controlled by any electric network in the European Union.

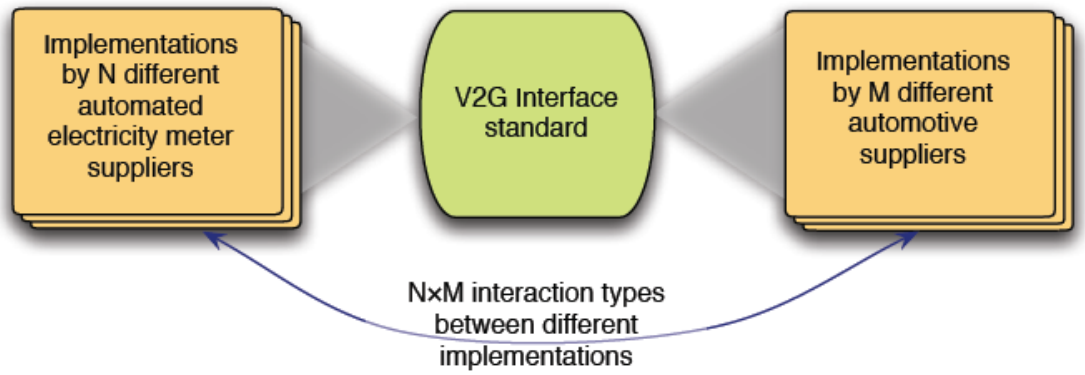

Figure 1. Multi-Vendor compatibility

Because of the large number of possible interaction types between various vendors, namely the multiple of automotive-side and grid-side implementations, such interoperability testing requires careful and thorough methodology. The methodology followed is based on an ITS framework specified in the ETSI recommendation EG 202

798 [4], offering a base for further interoperability test specifications. Nevertheless, this deliverable specifies a first set of potential interoperability tests to be used in future V2G interoperability test specifications.

PowerUp project specifies a system architecture where different entities are involved, and potentially different manufacturers of these entities could be considered; WP6 and concretely this deliverable is focused on defining a framework for interoperability testing addressing the V2G standard interface between the A-VG2 and the I-V2G based on ISO 15118-2 [1].

2. INTEROPERABILITY FRAMEWORK

The purpose of this deliverable is the development of an interoperability testing framework for V2G interface, based on:

- the standard ISO/IEC 15118-2 [1],
- the PowerUp architecture [7] specified in WP3, and
- the Demo stories [5] written in WP5.

Interoperability testing involves control and observation at the functional (rather than signalling) level, then interoperability tests should be described in terms of activities by the user of the endpoint equipment.

As V2G communication is part of the ITS (Intelligent Transport System) technology, this framework is based on [4], which provides guidance for the development of interoperability test strategies and its test specifications.

The guidance recommends following four separated steps as next pictures illustrates. This deliverable provides description of each step in the sections indicated.

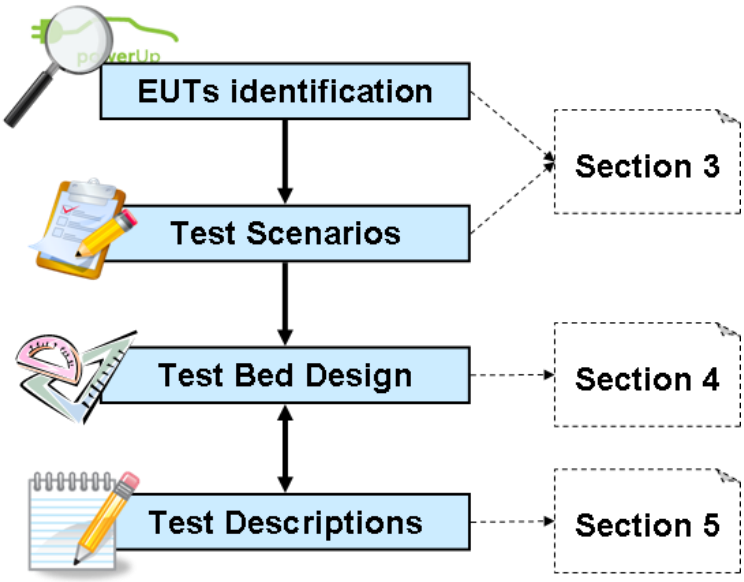

Figure 2. PowerUp Interoperability Framework

- **Step 1 - Identification of candidate Equipment Under Tests (EUTs) (Section 3)**

In this step, the EUTs are identified based on the interface to be tested. An EUT is a physical implementation where the IUT (Implementation Under Test) resides, and concretely in interoperability testing, the EUTs must interact with one or several EUTs. In other words, the EUTs are the devices to be tested.

- **Step 2 - Identification of Test Scenarios (Section 3)**

Interoperability testing is more focused on checking the functionality of the EUTs. Therefore, the identification of different test scenarios from end user point of view is required.

- **Step 3 - Specification of Test Bed (Section 4)**

After analyzing the test scenarios, the test bed architecture must be specified in order to cover all the test scenarios. In addition, different test configurations can be defined. The definition of the test bed architecture should be done simultaneously with the test description specification.

- **Step 4 - Development of Test Descriptions (Section 5)**

Once the Test Bed and the Test Scenarios are specified, the description of interoperability test is possible. Obviously, some feedback can be provided to the Test Bed in order to enhance its specification accordingly.

3. EQUIPMENTS UNDER TEST AND TEST SCENARIOS

3.1. Equipments Under Test

PowerUp architecture [4] specifies a complex and heterogeneous system where V2G communication is the core part of it as next figure illustrates.

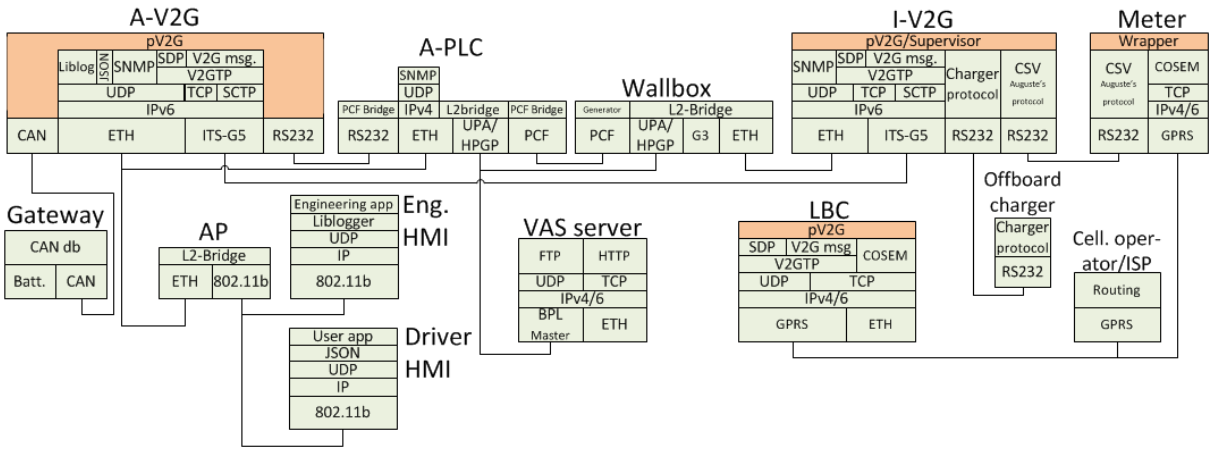

Figure 3. PowerUp Architecture

Having into consideration the main goal of the interoperability testing, the EUTs are those which interact in such a V2G interface implementing the ISO/IEC 15118-2 standard. Therefore, the A-V2G and the A-PLC entities compose together the EUT on the vehicle side (hereinafter **A_EUT**), and the Wallbox and the I-V2G entities compose together the EUT on the infrastructure side (hereinafter **I_EUT**).

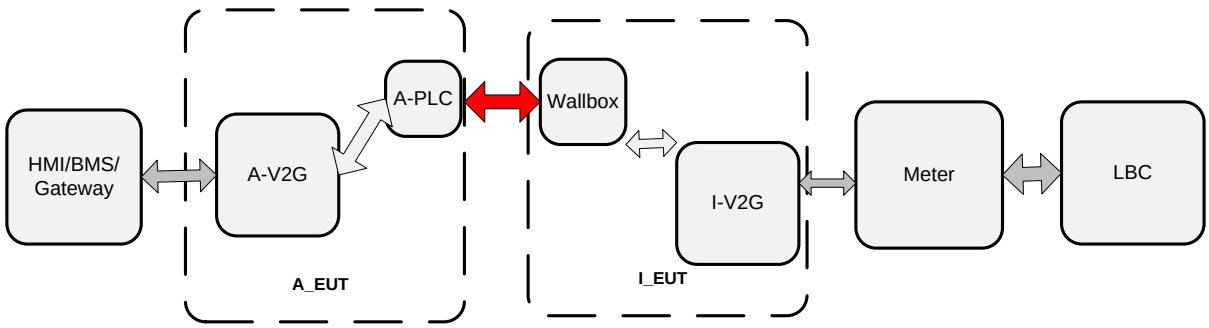

Figure 4. PowerUp EUTs

The rest of functional entities indirectly participate in the V2G communication, and they are going to be considered, after specification of the test scenarios, in the design of the V2G interoperability test bed.

3.2. Test Scenarios (Demo stories)

The purpose of the test scenarios is defining real situations where the EUTs are going to be involved with the aim of covering as much functionality as possible to be tested.

The test scenarios selected for interoperability are based on the demo stories specified in [5]. These demo stories are classified depending on the charging mode (AC or DC).

A set of four demo stories have been selected and listed below.

- **[AC MODE]** Regular delivery basis (REG). This story considers different situations.
    - REG A) No intervention by the grid, always achieves full state of charge according to BMS (not necessarily 100% of battery cap.).
    - REG B) Limitation by the grid performed. This story considers different situations.
        - b1) Cancel charging
        - b2) Accept higher price.
        - b3) Accept a different schedule (maybe same price).
        - d1) In case of emergency, complete change (i.e. to protect grid stability).
        - d2) Change schedule in terms of contract not violated.
- **[AC MODE]** Express Delivery (EXP) C) Departure time variable. This story considers different situations.
    - b1) Change schedule in terms of contract not violated.
    - B2) Leave at earlier departure time.
- **[AC MODE]** Value-added Service (VAS) to profit from high speed connection.
- **[DC MODE]** Bus On-Time (BOT) F) Bus On-Time - fast charging.

4. V2G TEST BED

A test bed is a complete set of all vendors implementation (EUTs) involved in the interoperability tests, together with the set of equipment and procedures required to enable vendors' implementations to execute the tests.

The interoperability test cases developed in the V2G test bed may be executed either by a human operator or by an automated program.

4.1. Functional Architecture

The test bed functional architecture is an abstract description of all required logical entities as well as their interfaces and communication links in order to design the test bed.

When testing an EUT for interoperability, it is essential that the test architecture includes equipment that has already been proven to interoperate with similar equipment from other suppliers. These equipments are known as golden reference units (GRU) or qualified equipment (QE). Obviously, any given QE will have initially been tested as an EUT, but, once the full range of interoperability tests have been successfully performed, it can be considered to be a QE. However, due to the new and developing V2G technologies, no QEs exist.

Therefore, the architecture only involves two EUTs (one A_EUT and one I_EUT), rather than a number of QEs and one EUT, in order to cover the Demo Stories. However, for future test specifications, it should be advisable to have more than one A_EUT and I_EUT to test more potential stories.

The combination of the two EUTs is called System Under Test (SUT).

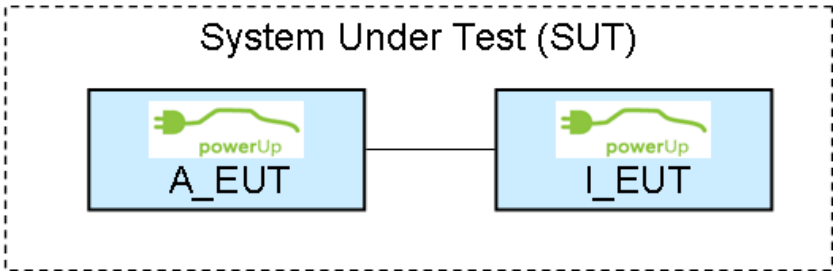

Figure 5. PowerUp SUT

Based on the selected test scenarios, and on the PowerUp architecture, the functional architecture of the test bed is composed of the following entities:

- V2G SUT.
- Simulators.
- Test Bed Module Control.
- Monitor

Next picture depicts the test bed architecture with its interfaces considering all the entities previously described. The interfaces also illustrated in the figure are described in section 4.2.

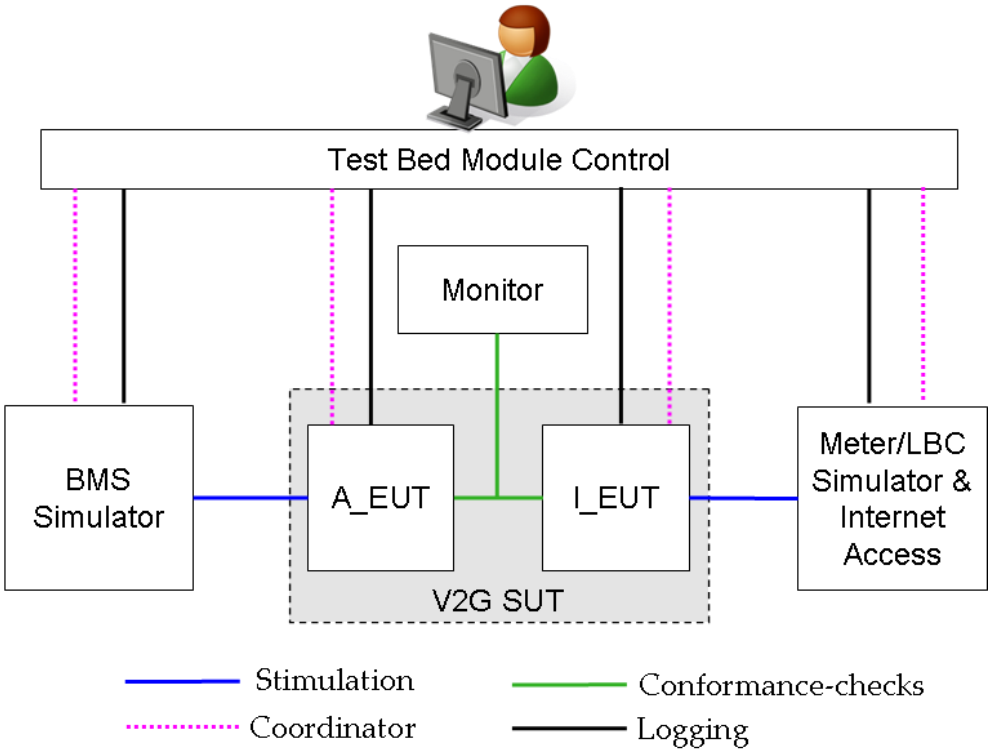

Figure 6. Interoperability Test Bed Architecture

4.1.1. V2G System Under Test

The V2G SUT includes the EUTs to be tested being a ***mandatory*** entity in the test bed. The physical layer connection between the two EUTs can be based on the different Power Line communication (PLC) technologies such as G3 or HPGP (HomePlug Green PHY).

4.1.2. Simulators

These simulators must provide all the services or functionalities to the EUTs. The simulators are not object of the test. Their functionality depends on the interoperability test to be executed. These are considered ***mandatory*** entities depending on the test to be executed.

According to the demo stories and the PowerUp architecture, three simulators are identified:

- BMS Simulator: this simulator interacts with the A_EUT giving information about the battery status.
- Meter/LBC Simulator: this simulator implements a double role acting both as Meter and LBC, being the I_EUT who interacts with it.
- Internet Access: this entity offers internet access to the A_EUT through the I_EUT.

From an implementation point of view, these simulators could be either PCs with a piece of software simulating the expected behavior or real implementation of the entities to be simulated.

4.1.3. Test Bed Module Control

The Test Bed Module Control manages the whole test bed being a ***mandatory*** entity. In many cases, this module can be considered a human (the test operator), but in others it will be more appropriate to think of user as an application within a software system.

This entity is able to perform the following actions over the other entities, and even the EUTs:

- synchronize,
- configure,
- control and
- run

Optionally, and as a means of improving testing efficiency and consistency, the role of this module may be performed by an automatic device programmed to carry out the specified test steps through the control interface (See section 4.2).

4.1.4. Monitor

The Monitor checks and gathers messages on the V2G communication links related to the ISO/IEC 15118-2 protocol [1]. This entity is considered as an optional entity.

Through this monitor, conformance check-points could be also considered during interoperability testing allowing the combination of conformance and interoperability testing.

The monitor is placed at normal communication interfaces between the A_EUT and the I_EUT rather than dedicated interfaces used for testing purpose as conformance testing does.

4.2. Interfaces

As it was illustrated in test bed architecture, four different interfaces have been identified:

- Stimulation,
- Coordination,
- Conformance-Checks, and
- Logging.

Not all interfaces are mandatory to be implemented in a real implementation of the test bed. The two mandatory interfaces, stimulation and coordination, are also called Test interfaces.

4.2.1. Stimulation

This interface offers the possibility of interaction between the EUTs and the simulators being ***mandatory*** to be implemented. It is recommendable that this interface is as much standard as possible. These interfaces are bidirectional, and they are the following:

- BMS ←→ A_EUT: according to the PowerUp architecture this interface must be based on CAN interface, so both side should implement the CAN protocol.
- Meter/LBC ←→ I_EUT: according to the PowerUp architecture this interface must be based on RS232 interface. The interface between the Meter and the LBC are out of the scope of this test bed, and it is considered proprietary implemented.

4.2.2. Coordination

This interface configures and controls the entities of the test bed, and even the EUTs, being a ***mandatory*** interface. This interface is accessible through Test Bed Module Control either directly via the test operator or via a software program. In the simplest case, this interface will be the normal user interfaces offered by the EUT and the Simulators.

This interface can be either proprietary (non standardized) or a standardized interface. In a manual test execution, test operators operate this equipment in order to produce the behaviour required by the test.

4.2.3. Conformance checks

This interface is in charge of gathering protocol message exchanged between the EUTs, being an optional interface to be considered in the test bed implementation. For definition this interface is standard and based on ISO/IEC 15118-1/2. This interface offers the point of observation for conformance check-points.

4.2.4. Logging

This interface collects as much information as possible about the different entities during the test execution, being an optional interface to be considered. These interfaces are normally internal interfaces that the EUTs and the Simulator may offer public. From automation point of view, it should be desirable that these interfaces are standardized.

4.3. Test Configurations

Based on the test bed architecture previously described, three test configurations have been identified depending on the demo stories to be considered during the test execution.

4.3.1 Test Configuration 1 – Meter

This test configuration covers the following demo stories: REG A). For these tests, the LBC functionality is not required.

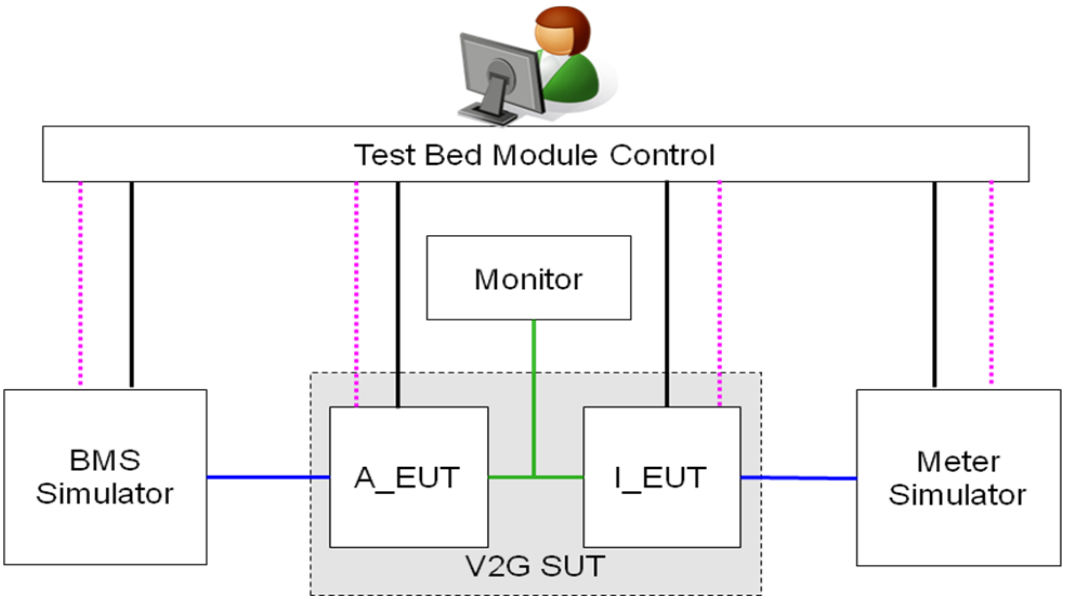

Figure 7. Test Configuration 1

4.3.2 Test Configuration 2 – Meter & LBC

This test configuration covers the following demo stories: REG B), EXP C) and BOT F). during these tests, the LBC functionality must be also considered.

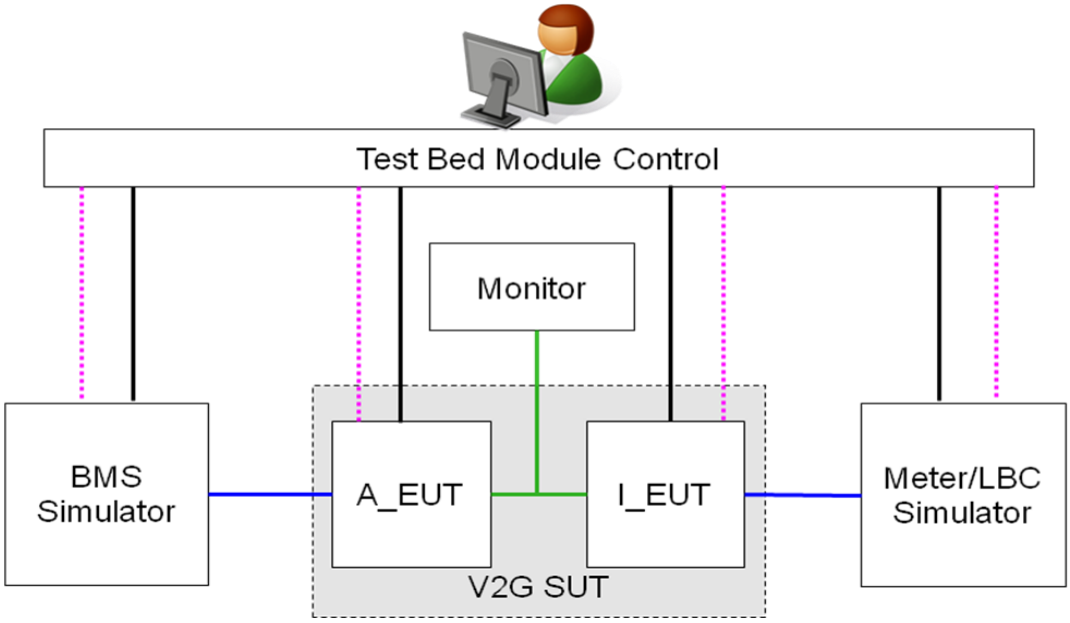

Figure 8. Test Configuration 2

4.3.3 Test Configuration 3 – Internet Access

This test configuration covers the following demo stories: VAS D)

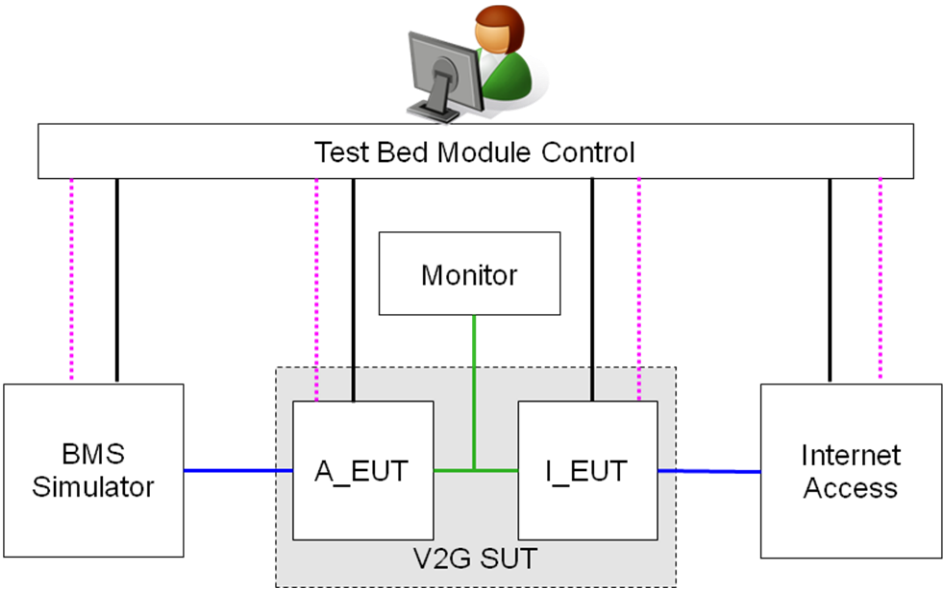

Figure 9. Test Configuration 3

4.4. Automation Guidance

Interoperability testing can be executed either manually or automatically. The benefits of the automated interoperability testing are the following:

- Accelerate the test execution, for instance checking message content requires several minutes for a test operator against few milliseconds for an automated test bed.
- Ensure that each execution of a test is identical and even repeatable.
- Reduce the required manpower to execute the interoperability tests.

The standardization of the interfaces used in the test execution is considered a must for allowing the automation of interoperability testing.

This interoperability framework provides a set of functionalities that could be automated in future test bed implementation:

- Operation and configuration of EUTs;
- Monitoring of relevant interfaces between EUTs;

- Operation of all equipment involved in an interoperability test (non EUTs);
- Computation of test verdicts;
- Test execution;
- Generation of test reports.

However, the availability of automate the functionalities previously identified depends on the resources required to implement all or part of these, even becoming prohibitively expensive.

The following scenarios need to be taken in consideration when trying to automate the control of equipment via non-standardized interfaces considering also the high cost of development:

- One or more EUTs may need to be configured prior to an interoperability test execution. In some cases this configuration can be handled by the equipment operator once before executing the entire interoperability test suite or multiple tests. However, other cases may require a modification of equipment configuration(s) prior or during an interoperability test case execution.
- Frequently one or more EUTs may need to be operated, i.e. stimulated and observed during a test case execution, e.g. in order to initiate a call from a phone, check that a phone is ringing, etc.
- As part of test configuration some test equipment, e.g. monitoring equipment, may need to be configured, e.g. to configure message filters on specific interfaces for a specific test.

5. TEST DESCRIPTIONS

A "Test Description" (TD) is a well detailed description of a process that pretends to test one or more functionalities of an implementation. Applying to interoperability testing, these testing objectives address the interoperable functionalities between two or more vendor implementations.

5.1. Test Description Template and Naming convention

The proposed template for specifying the TP follows a tabular format as it is described below.

Identifier	A unique test description ID (See Table 1).
Objective	A concise summary of the test which should reflect the purpose of the test and enable readers to easily distinguish this test from other test in the document.
Configuration	Identifier of the test configuration to be used for this test
References	The reference indicates the sub-clauses of the reference standard specifications in which the conformance requirement is expressed.
Pre-Test Conditions	A list of test specific pre-conditions that need to be met by the EUTs including information about equipment configuration
Test Sequence	An ordered list of EUT operation and observation. In case of a conformance test description the test sequence contains also the conformance checks as part of the observations.

Table 1: TD naming convention

TD/<root>/<gr>/<nn>	
<root> = root	PowerUp
<gr> = group	REGA
	REGB
	EXPC
	VAS
	BOT
<gr> = subgroup	CC (Cancel charge)
	AHP (Accept higher price)
	ADS (Accept different schedule)
	CCH (Complete charge)
	CSCH (Change schedule)
	LEA (Leave earlier)
<nn> = sequential number	01 to 99

5.2. Test Description Summary

5.2.1. Mandatory Tests

Table 2: Mandatory Tests

1	TD_PowerUp_REGA _01	Detection of SECC (SDP- SECC discovery protocol)
2	TD_PowerUp_REGA _02	Establishing a V2G session
3	TD_PowerUp_REGA _03	Searching for SECC offered services
4	TD_PowerUp_REGA _04	Metering loop test for AC charge
5	TD_PowerUp_REGA_CCH_05	Finishing AC charge process
6	TD_PowerUp_REGB_01	Selecting a charge schedule plan
7	TD_PowerUp_REGB_CC_01	User cancel before charge
8	TD_PowerUp_REGB_CC_02	LBC cancel before charge (grid limitations)
9	TD_PowerUp_EXPC_LEA_01	User cancel during the charge (Immediate leaving)
10	TD_PowerUp_EXPC_LEA_02	Requesting another departure time (earlier or later departure time)
11	TD_ PowerUp_BOT_01	Starting DC charge process
12	TD_ PowerUp_BOT_02	Metering loop test for DC charge
13	TD_ PowerUp_BOT_03	Finishing DC charge process

5.2.2. Optional Tests

Table 3: Optional Tests

1	TD_PowerUp_REGA _06	Service and payment selection testing
2	TD_PowerUp_VAS _01	Internet access service selection

5.3. Test Setup

This chapter presents the test setup for the EUTs in the context of PowerUp project according to the prototypes implemented in WP5 in terms of PHY, MAC, Network and Transport OSI layers.

5.3.1. PHY layer

The physical layer connection is based on PLC. The implemented Broadband over Power Line (BPL) for this test is HPGP [6].

5.3.2. Medium Access layer (MAC)

The MAC layer is implemented according to the requirements of HPGP using a fixed MAC address. For further details please read [6].

5.3.3. Network and Transport layer

The applied network layer protocol is IPv6 and the transport protocol is TCP for V2G messages, and UDP for SDP messages with the conditions and requirements defined in [1].

The session layer is implemented according to the requirements defined in [1]. The session layer is V2G transfer protocol (V2GTP). The V2GTP shall be used with the following mapping:

Table 4: V2G Port Mapping

	Destination port
V2G SECC discovery protocol	15118 (UDP)
V2G_SRC_TCP_DATA	Dynamic Ports (49152-65535) TCP(unicast)
V2G_DST_TCP_DATA	TCP (unicast) it will be dynamically assigned by the SDP mechanism
HTTP and HTTPS port	80, 81 (TCP)

for internet access	

5.4. Tests

5.3.3. REG A) No intervention by the grid

Interoperability Test Description			
Identifier:	TD_PowerUp_REGA _01		
Objective:	Detection of SECC (SDP- SECC discovery protocol)		
Configuration:	CF1		
References:	[1] 7.10.1, [2] 3.5.1		
Pre-test conditions:	• One A_EUT device in default state, • One I_EUT device in default state, • The A_EUT has a link local IPv6 address, • I_EUT has at least one link local IPv6 address		
Test Sequence:	**Step**	**Type**	**Description**
	1	stimulus	A_EUT sends a link local multicast (FF02::1) containing SECC discovery request
	2	verify	I_EUT receives the link local multicast SECC discovery request
	3	Check	I_EUT sends the SECC discovery response
	4	Verify	A_EUT receives the SECC discovery response
	5	check	The A_EUT shows the current serving I_EUT is the originator of the SECC discovery response
	6	Check	The A_EUT informs the user interface that it is plugged in

Interoperability Test Description			
Identifier:	TD_PowerUp_REGA _02		
Objective:	Establishing a V2G session		
Configuration:	CF1		
References:	[1] 8.4.1.2, [2] 3.5.2		
Pre-test conditions:	• One A_EUT device, • One I_EUT device, • A_EUT received SECC discovery response message		
Test Sequence:	**Step**	**Type**	**Description**
	1	stimulus	A_EUT sends a Supported Application protocol request to I_EUT

Interoperability Test Description			
	2	verify	I_EUT receives a Supported Application Protocol request
	3	verify	I_EUT sends a Supported Application Response to A_EUT
	4	verify	A_EUT receives a Supported Application Response
	5	stimulus	A_EUT sends a Session setup request to I_EUT
	6	verify	I_EUT receives a Session setup request
	7	Verify	The I_EUT informs the meter about the new session being requested
	8	Stimulus	The meter replies positively to I_EUT
	9	verify	I_EUT receives the Write response from meter
	10	verify	I_EUT sends the Session setup response
	11	verify	A_EUT receives the Session setup response
	12	Check	The A_EUT informs the user interface that the V2G session is established

Interoperability Test Description			
Identifier:	TD_PowerUp_REGA_03		
Objective:	Searching for SECC offered services		
Configuration:	CF1		
References:	[1] 8.4.1.3, [2] 3.5.2		
Pre-test conditions:	• One A_EUT device, • One I_EUT device, • The V2G session between the two devices is successfully established		
Test Sequence:	**Step**	**Type**	**Description**
	1	stimulus	A_EUT sends a Service Discovery request to I_EUT
	2	verify	I_EUT receives the Service Discovery request
	3	verify	I_EUT sends a Service Discovery response to A_EUT
	4	Verify	A_EUT receives the Service Discovery response
	5	Check	The A_EUT shows the services offered by I_EUT at the usr Interface

Interoperability Test Description			
Identifier:	TD_PowerUp_REGA _04		
Objective:	Metering loop test for AC charge		
Configuration:	CF1		
References:	[1] 8.4.2, [2] 3.5.2.3		
Pre-test conditions:	• One A_EUT device, • One I_EUT device, • A_EUT is successfully authenticated • Charging schedule plan is selected by A_EUT		
Test Sequence:	**Step**	**Type**	**Description**
	1	stimulus	A_EUT sends a Power Delivery request to I_EUT
	2	verify	I_EUT receives the Power Delivery request
	3	Check	The I_EUT sends the Power Delivery response to A_EUT
	4	Check	A_EUT sends a Charging status request to I_EUT
	5	verify	I_EUT receives the Charging status request
	6	Check	The I_EUT sends the read (Charging status) message to the meter
	7	stimulus	The meter sends the Read response to I_EUT
	8	Check	I_EUT sends the Charging status response to A_EUT
	9	verify	A_EUT receives the Charging status response
	10	Check	The A_EUT sends a Metering receipt request to I_EUT
	11	verify	I_EUT receives the Metering receipt request
	12	Check	The I_EUT sends the Metering receipt response to A_EUT
	13	verify	A_EUT receives the Metering receipt response
	14	Check	The A_EUT shows that the Metering receipt response came from the same I_EUT who was the original destination of the charging status request message.
	15	Check	The A_EUT updates the user interface about the charging status
	16	Verify	Steps 1 to 15 are repeated at frequency 10 sec

Interoperability Test Description			
Identifier:	TD_PowerUp_REGA _CCH_05		
Objective:	Finishing AC charge process		
Configuration:	CF1		
References:	[1] 8.4.1.12, [2] 3.5.2		
Pre-test conditions:	• One A_EUT device, • One I_EUT device, • Ongoing charge (active metering loop)		
Test Sequence:	**Step**	**Type**	**Description**
	1	Stimulus	The BMS informs A-EUT that the battery is fully recharged
	2	Check	The A_EUT sends a Metering receipt request to I_EUT
	3	verify	I_EUT receives the Metering receipt request
	4	Check	The I_EUT sends the Metering receipt response to A_EUT
	5	verify	A_EUT receives the Metering receipt response
	6	Check	A_EUT sends the Power delivery request to I_EUT
	7	verify	A_EUT receives the Power delivery request
	8	Check	I_EUT sends the Power delivery response to A_EUT
	9	verify	A_EUT receives the Power delivery response
	10	Check	I_EUT sends the Terminate request to meter
	11	Stimulus	The meter sends the Terminate response to I_EUT
	12	Check	The I_EUT receives the Terminate response sent by the meter
	13	Check	A_EUT sends the Session stop request to I_EUT
	14	verify	A_EUT receives the Session stop request
	15	Check	I_EUT sends the Session stop response to A_EUT
	16	Verify	The A_EUT receives the Session stop response message
	17	Check	A_EUT informs the user interface that the Charging process is finished

Interoperability Test Description			
Identifier:	TD_PowerUp_REGA _06		
Objective:	Service and payment selection		
Configuration:	CF1		
References:	[1] 8.4.1.5, [2] 3.5.2		
Pre-test conditions:	• One A_EUT device, • One I_EUT device, • V2G session has been established between A_EUT and I_EUT • A_EUT received service discovery response message		
Test Sequence:	**Step**	**Type**	**Description**
	1	Stimulus	The user interface informs A-EUT about the selected service and payment
	2	Check	A_EUT sends a Service and payment selection request
	3	verify	I_EUT receives a Service and payment selection request
	4	Check	I_EUT sends the Service and payment selection response
	5	Verify	A_EUT receives the Service and payment selection response
	6	Check	The A_EUT confirms the user interface the service and payment selection

5.3.4. REG B) Limitation by the grid performed

Interoperability Test Description			
Identifier:	TD_PowerUp_REGB_01		
Objective:	Selecting a charge schedule plan		
Configuration:	CF2		
References:	[1] 8.4.1.8		
Pre-test conditions:	• One A_EUT device, • One I_EUT device, • The A_EUT authentication completed successfully		
Test Sequence:	**Step**	**Type**	**Description**
	1	Stimulus	The User interface informs A_EUT about the selected charging scheduled
	2	Check	A_EUT sends a Charge parameter discovery request to I_EUT (containing the information provided/selected by user interface)
	3	verify	I_EUT receives the Charge parameter discovery request
	4	Check	The I_EUT sends the EAmount request to meter
	5	stimulus	The meter sends the EAmount response to

Interoperability Test Description			
			I_EUT
	6	verify	I_EUT receives the EAmount response
	7	Check	The I_EUT sends the Deptime,max current,voltage request to meter
	8	stimulus	The meter sends the Deptime,max current,voltage response to I_EUT
	9	verify	I_EUT receives the Deptime,max current,voltage response
	10	Check	I_EUT sends the Charging profile proposals request to the meter
	11	Stimulus	The meter sends the Charging profiles proposals to I_EUT
	12	Check	I_EUT sends the Charge parameter discovery response to A_EUT
	13	verify	A_EUT receives the Charge parameter discovery response
	14	Check	A_EUT informs the user interface about the changed charging schedule
	15	Stimulus	The User interface informs the A_EUT about the selected charging schedule
	16	Check	A_EUT sends a Power Delivery request to I_EUT
	17	verify	I_EUT receives the Power Delivery request
	18	Check	The I_EUT sends the Power Delivery response to A_EUT

Interoperability Test Description			
Identifier:	TD_PowerUp_REGB_CC_01		
Objective:	User cancel before charge		
Configuration:	CF2		
References:	[1] 8.4.1.8, [2] 3.5.2.4		
Pre-test conditions:	• One A_EUT device, • One I_EUT device, • The A_EUT authentication completed successfully		
Test Sequence:	**Step**	**Type**	**Description**
	1	Stimulus	The User interface informs A_EUT about the selected charging scheduled
	2	Check	A_EUT sends a Charge parameter discovery request to I_EUT (containing the information provided/selected by user interface)
	3	verify	I_EUT receives the Charge parameter discovery request
	4	Check	The I_EUT forwards the charge parameters to meter/LBC
	5	stimulus	The meter/LBC sends the schedule plans (based

Interoperability Test Description			
			on A_EUT data) to I_EUT
	6	Check	I_EUT sends the Charge parameter discovery response to A_EUT
	7	verify	A_EUT receives the Charge parameter discovery response
	8	Check	A_EUT informs the user interface about the changed charging schedule
	9	Stimulus	The User interface informs A_EUT to stop the charging process
	10	Check	A_EUT sends the Power delivery request to I_EUT
	11	verify	A_EUT receives the Power delivery request
	12	Check	I_EUT sends the Power delivery response to A_EUT
	13	Verify	A_EUT receives the Power delivery response
	14	Check	A_EUT informs the user interface that the charging process has been stopped
	15	Check	A_EUT sends the Session stop request to I_EUT
	16	verify	A_EUT receives the Session stop request
	17	Check	I_EUT sends the Session stop response to A_EUT

Interoperability Test Description			
Identifier:	TD_PowerUp_REGB_CC_02		
Objective:	LBC cancel before charge (grid limitation)		
Configuration:	CF2		
References:	[1] 8.4.1.8, [2] 3.5.2.4		
Pre-test conditions:	• One A_EUT device, • One I_EUT device, • The A_EUT authentication completed successfully		
Test Sequence:	**Step**	**Type**	**Description**
	1	Stimulus	The User interface informs A_EUT about the selected charging scheduled
	2	Check	A_EUT sends a Charge parameter discovery request to I_EUT (containing the information provided/selected by user interface)
	3	verify	I_EUT receives the Charge parameter discovery request
	4	verify	The I_EUT sends the Charge profile proposal request to meter
	5	stimulus	The LBC sends the error message to I_EUT (grid limitation) (Charge profile proposal response)
	6	Check	I_EUT sends the Charge parameter discovery response to A_EUT

Interoperability Test Description			
	7	verify	A_EUT receives the Charge parameter discovery response
	8	Check	A_EUT informs the user interface that charging process failed because a grid limitation
	9	Check	A_EUT sends the Session stop request to I_EUT
	10	verify	A_EUT receives the Session stop request
	11	Check	I_EUT sends the Session stop response to A_EUT

5.3.5. EXP C) Departure time variable

Interoperability Test Description			
Identifier:	TD_PowerUp_EXPC_LEA_01		
Objective:	User cancel during the charge (Immediate leaving)		
Configuration:	CF2		
References:	[1] 8.4.1.9, [2] 3.5.2.5		
Pre-test conditions:	• One A-EUT device, • One I_EUT device, • Ongoing charge process (metering loop) Meter reading response sent to A_EUT		
Test Sequence:	**Step**	**Type**	**Description**
	1	Stimulus	User interface informs A_EUT to stop the charging process
	2	Check	A_EUT sends a Power delivery request to I_EUT
	3	verify	I_EUT receives the Power Delivery request
	4	Check	I_EUT sends the Power Delivery response to A_EUT
	5	verify	A_EUT receives the Power Delivery response
	6	Check	The A_EUT sends a Session stop request to I_EUT
	7	verify	A_EUT receives the Session stop request
	8	Check	The I_EUT sends the Session stop response to A_EUT
	9	verify	A_EUT receives the Session stop response
	10	Check	A_EUT informs the user interface that charging process has been stopped

Interoperability Test Description			
Identifier:	TD_PowerUp_EXPC_LEA_02		
Objective:	Requesting another departure time (earlier or later departure time)		
Configuration:	CF2		
References:	[1] 8.4.1.9, [2] 3.5.2.5		
Pre-test conditions:	• One A_EUT device, • One I_EUT device, Ongoing charge process (metering loop) Meter reading response sent to A_EUT		
Test Sequence:	**Step**	**Type**	**Description**
	1	Stimulus	User interface informs A_EUT to restart the V2G session
	2	Check	The A_EUT sends the Power delivery request
	3	verify	The I_EUT receives the Power delivery request
	4	verify	The I_EUT sends the Power delivery response
	5	Stimulus	The user interface informs A_EUT about the selected charging schedule (setting new departure time)
	6	Check	The A_EUT sends the Charge parameter discovery request
	7	Check	The I_EUT sends the EAmount request to meter/LBC containing the new EAmount
	8	stimulus	The LBC/meter sends the Departure time request to I_EUT
	9	Verify	The I_EUT receives the new departure time
	10	Check	The _EUT sends the Departure time response to LBC/meter
	11	verify	The I_EUT sends the Charge parameter discovery response to A_EUT
	12	Check	The A_EUT informs the user interface about the changed charging schedule

5.3.6. BOT F) Bus On-Time - fast charging

Interoperability Test Description			
Identifier:	TD_PowerUp_BOT _01		
Objective:	Starting DC charge process		
Configuration:	CF2		
References:	[1] 8.4.3		
Pre-test conditions:	• One A_EUT device, • One I_EUT device, • A_EUT is successfully authenticated		
Test Sequence:	**Step**	**Type**	**Description**
	1	Stimulus	The user interface informs A_EUT about the selected service and payment indicating DC recharge service.
	2	Check	A_EUT sends a Charge parameter discovery request to I_EUT
	3	Verify	I_EUT receives Charge parameter discovery request
	4	Check	I_EUT sends Charge parameter discovery response to A_EUT
	5	Verify	A_EUT receives Charge parameter discovery response
	6	Check	A_EUT sends the Cable Check request to I_EUT
	7	Verify	I_EUT receives Cable Check request
	8	Check	I_EUT sends Cable Check response to A_EUT
	9	Check	A_EUT sends the PreCharge request to I_EUT
	10	Verify	I_EUT receives PreCharge request
	11	Check	I_EUT sends PreCharge response to A_EUT

Interoperability Test Description			
Identifier:	TD_PowerUp_BOT _02		
Objective:	Metering loop test for DC charge		
Configuration:	CF2		
References:	[1] 8.4.3		
Pre-test conditions:	• One A_EUT device, • One I_EUT device, • A_EUT is successfully authenticated • DC Charging schedule plan is selected by A_EUT • Cable check and preCharge message exchange completed successfully.		
Test Sequence:	**Step**	**Type**	**Description**
	1	Stimulus	The A_EUT informs the user interface that charging process is ready to start after receiving

Interoperability Test Description			
			preCharge response from I_EUT
	2	Check	A_EUT sends a Power Delivery request to I_EUT
	3	verify	I_EUT receives the Power Delivery request
	4	Check	The I_EUT sends the Power Delivery response to A_EUT
	5	Check	A_EUT sends a Current Demand request to I_EUT
	6	verify	I_EUT receives the Current Demand request
	7	Check	The I_EUT sends the Read message to the meter
	8	stimulus	The meter sends the Read response to I_EUT
	9	Check	I_EUT sends the Current Demand response to A_EUT
	10	Check	The A_EUT updates the user interface about the charging status
	11	Verify	Steps 5 to 10 are repeated at frequency 10 sec

Interoperability Test Description			
Identifier:	TD_PowerUp_BOT _03		
Objective:	Finishing DC charge process		
Configuration:	CF2		
References:	[1] 8.4.3		
Pre-test conditions:	• One A_EUT device, • One I_EUT device, • Ongoing charge (active metering loop)		
Test Sequence:	**Step**	**Type**	**Description**
	1	Stimulus	The BMS informs A-EUT that the battery is fully recharged
	2	Check	The A_EUT sends a Current Demand request to I_EUT
	3	verify	I_EUT receives the Current Demand request
	4	Check	The I_EUT sends the Current Demand response to A_EUT
	5	verify	A_EUT receives the Current Demand response
	6	Check	A_EUT sends the Power delivery request to I_EUT
	7	verify	A_EUT receives the Power delivery request
	8	Check	I_EUT sends the Power delivery response to A_EUT
	9	verify	A_EUT receives the Power delivery response
	10	Check	I_EUT sends the Terminate request to meter
	11	Stimulus	The meter sends the Terminate response to I_EUT
	12	Check	The I_EUT receives the Terminate response sent

Interoperability Test Description			
			by the meter
	13	Check	The A_EUT sends a Welding Detection request to I_EUT
	14	verify	I_EUT receives the Welding Detection request
	15	Check	The I_EUT sends the Welding Detection response to A_EUT
	16	verify	A_EUT receives the Welding Detection response
	17	Check	A_EUT sends the Session stop request to I_EUT
	18	verify	A_EUT receives the Session stop request
	19	Check	I_EUT sends the Session stop response to A_EUT
	20	Verify	The A_EUT receives the Session stop response message
	21	Check	A_EUT informs the user interface that the charging process is finished

5.3.7. VAS Value-added Service

Interoperability Test Description			
Identifier:	TD_PowerUp_VAS _01		
Objective:	Internet access service selection		
Configuration:	CF3		
References:	[1] 8.6.3.5, [1] Annex D1		
Pre-test conditions:	• One A_EUT device, • One I_EUT device, • V2G session has been established between A_EUT and I_EUT • A_EUT received service discovery response message • The I_EUT offered services are available at user interface		
Test Sequence:	**Step**	**Type**	**Description**
	1	Stimulus	The user interface informs A_EUT about the selected service and payment indicating Internet (http or https) service.
	2	Check	A_EUT sends a Service and payment selection request
	3	verify	I_EUT receives a Service and payment selection request
	4	Check	I_EUT sends the Service and payment selection response
	5	Verify	A_EUT receives the Service and payment selection response
	6	Check	The A_EUT confirms the user interface the selected service and payment

6. CONCLUSIONS

This deliverable complements the work done in the D6.1 offering an overview of the scenarios to be tested for future V2G interoperability events following the guidance of the ITS framework specified in [4].

This deliverables has presented:

- The candidates EUTs.
- the interoperability test bed designed,
- a complete description of the interconnections and measurement equipments,
- a set of interoperability test descriptions has been specified.

REFERENCES

[1] ISO/IEC CD 15118-2 Road vehicles — Vehicle-to-Grid Communication Interface — Part 2.

[2] PowerUp Delivery 4.1: V2G Interface specifications between the electric vehicle, the local smart meter, and ITS service providers (2012-06).

[3] PowerUp Delivery 4.2: Specifications for the enhancement of existing smart metering protocols (2012-07).

[4] ETSI EG 202 798: Intelligent Transport Systems (ITS); Testing; Framework for conformance and interoperability testing (2011-01).

[5] PowerUp Delivery 5.1: Automotive prototyping of V2G adapters (2012-12).

[6] HomePlug Green PHY Specification Release Version 1.1 (2012-09-04).

[7] PowerUp Delivery 3.2: Final V2G Architecture (2012-09).