NG112 Emergency Communications Plugtest™

Interoperability Test Description

Final Version 1.2

Dr. Wolfgang Kampichler

April, 2016

This page is intentionally left blank.

Contents

This page is intentionally left blank.

1 Scope

The present document represents an interoperability test specification with the purpose of supporting the NG112 Emergency Communications Plugtest™ 2016 by covering the following:

- location & location based call routing
- audio, video, real-time text
- policy based routing
- LTD functional elements
- logging and recording

The main focus is to validate the interoperability and conformity of different solutions on the market on end to end emergency services communications. The following figure (Fig. 1) illustrates the basic test infrastructure.

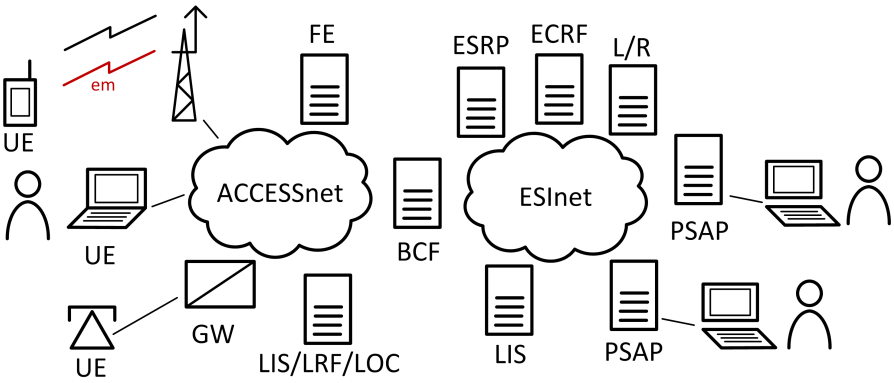

Figure 1: Testbed

The given test infrastructure supports several variations of end to end emergency communication. The following lists high level test objectives that are major items to be proven as an outcome of the testing.

- **Connectivity:** Tests cover basic connectivity between functional elements at both, network and application level. Application level refers to signaling and media transport protocols in use.
- **Routing:** Tests cover variants of location based emergency call routing. These include different methods how user location is assessed and how this information is delivered to emergency services.
- **Media:** Tests cover different media types in order to contact emergency services. Besides the three main types audio, video and text, test scenarios may also consider messaging and additional data.
- **Policy:** Tests cover variants of policy based emergency call routing. A major strength of next generation emergency communication are advanced call routing features that allow retargeting emergency calls based on time of day , call volume and queue or element state.

- **Quality:** Tests cover quality aspects with respect to emergency calling. These are among others successful call setup, call setup time, and media quality. Specific tests depend on access networks and core services that are considered for testing.
- **Logging & Recording:** Tests cover logging and recording aspects with respect to emergency calling. These are among others successful media recording and event logging. Specific tests depend on access networks and core services that are considered for testing.

The following lists test cases and test objectives that are explained further in chapter 7.

- **Connectivity [5]:**

CN/BASIC/01 (7.1.1)	Verify end-to-end connectivity between UE and PSAP for admininistrative calls
CN/NGCS/01 (7.1.2)	Verify end-to-end connectivity between UE and PSAP for emergency calls including IP access and NG core services
CN/NGCS/02 (7.1.3)	Verify end-to-end connectivity between UE and PSAP for emergency calls including IMS/VoLTE access and NG core services
CN/NGCS/03 (7.1.4)	Verify end-to-end connectivity between UE and PSAP for emergency calls including UC access and NG core services
CN/NGCS/04 (7.1.5)	Verify end-to-end connectivity between UE and PSAP for emergency calls including PSTN access and NG core services

- **Routing [8]:**

RT/LBV/01 (7.2.1)	Verify end-to-end connectivity between UE and PSAP for emergency calls including IP access, NG core services and Location By Value
RT/LBV/02 (7.2.2)	Verify end-to-end connectivity between UE and PSAP for emergency calls including IMS/VoLTE access, NG core services and Location By Value
RT/LBV/03 (7.2.3)	Verify end-to-end connectivity between UE and PSAP for emergency calls including UC, NG core services and Location By Value
RT/LBV/04 (7.2.4)	Verify end-to-end connectivity between UE and PSAP for emergency calls including PIF, NIF, NG core services and Location By Value
RT/LBR/01 (7.2.5)	Verify end-to-end connectivity between UE and PSAP for emergency calls including IP access, NG core services and Location By Reference
RT/LBR/02 (7.2.6)	Verify end-to-end connectivity between UE and PSAP for emergency calls including IMS/VoLTE access, NG core services and Location By Reference
RT/LBR/03 (7.2.7)	Verify end-to-end connectivity between UE and PSAP for emergency calls including UC access, NG core services and Location By Reference
RT/LBR/04 (7.2.8)	Verify end-to-end connectivity between UE and PSAP for emergency calls including PIF, NIF, NG core services and Location By Reference

- **Media [3]:**

MM/VID/01 (7.3.1)	Verify end-to-end connectivity between UE and PSAP for multimedia emergency calls (audio and video) including IP access and NG core services
MM/RTT/01 (7.3.2)	Verify end-to-end connectivity between UE and PSAP for multimedia emergency calls (audio and text) including IP access and NG core services
MM/TC/01 (7.3.3)	Verify end-to-end connectivity between UE and PSAP for multimedia emergency calls (audio, video and text) including IP access and NG core services

- **Policy [4]:**

PO/TIME/01 (7.4.1)	Verify end-to-end connectivity between UE and PSAP for emergency calls including IP access, NG core services and routing policies (time)
PO/STAT/01 (7.4.2)	Verify end-to-end connectivity between UE and PSAP for emergency calls including IP access, NG core services and routing policies (queue state)
PO/LNG/01 (7.4.3)	Verify end-to-end connectivity between UE and PSAP for emergency calls including PIF, NIF, NG core services and PIF RTP monitoring features
PO/LNG/02 (7.4.4)	Verify end-to-end connectivity between UE and PSAP for emergency calls including PIF, NIF, NG core services and PIF SIP monitoring features

- **Quality [2]:**

QU/LOAD/01 (7.5.1)	Verify end-to-end connectivity between UE and PSAP for emergency calls including IMS/VoLTE access, NG core services and eNodeB load emulation
QU/LOAD/02 (7.5.2)	Verify end-to-end connectivity between UE and PSAP for emergency calls including IP access (IMS/OTT), NG core services and eNodeB load emulation

2 References

References are either specific (identified by date of publication and/or edition number or version number) or non specific. For specific references, only the cited version applies. For non-specific references, the latest version of the reference document (including any amendments) applies. Referenced documents which are not found to be publicly available in the expected location might be found at http: ...

2.1 Normative References

The following referenced documents are necessary for the application of the present document.

n.1 EENA. Next Generation 112 Long Term Definition, Version 1.1, March 2013. http://www.eena.org/uploads/gallery/files/pdf/2013-03-15-eena_ng_longtermdefinitionupdated.pdf.

n.2 EMTEL. Emergency Communications (EMTEL); Total Conversation Access to Emergency Services, ETSI TR 103 170, June 2012. http://webapp.etsi.org/workprogram/FrameWorkItemList.asp?qETSINUMBER=103+170.

n.3 EMTEL. Emergency Communications (EMTEL); Total Conversation Access to Emergency Services, ETSI TS 101 470, June 2012. http://webapp.etsi.org/workprogram/FrameWorkItemList.asp?qETSINUMBER=101+470.

n.4 3GPP. TS 22.173: IP Multimedia Core Network Subsystem (IMS) Multimedia Telephony Service and Supplementary Services; Stage 1, Version 9.4.0, December 2009.

n.5 3GPP. TS 23.167: IP Multimedia Subsystem (IMS) Emergency Sessions, Version 9.3.0, December 2009.

n.6 3GPP. TS 24.229: IP Multimedia Call Control Protocol Based on Session Initiation Protocol (SIP) and Session Description Protocol (SDP), Stage 3, Release 11, Version 11.4.0, June 2012.

n.7 Reed, C. and Thomson, M. GML 3.1.1 PIDF-LO Shape Application Schema for Use by the Internet Engineering Task Force (IETF), April 2007. http://portal.opengeospatial.org/files/?artifactid=21630.

n.8 Lake, R. and Reed, C. GML Point Profile, Version 0.4, July 2005. Open Geospatial Consortium, http://portal.opengeospatial.org/files/?artifactid=11606.

n.9 Vretanos, P. GML Simple Features Profile, Version 1.0, April 2006. Open Geospatial Consortium, http://portal.opengeospatial.org/files/?artifactid=15201.

n.10 IANA. Geopriv HTTP Enabled Location Delivery (HELD) Parameters Registry. http://www.iana.org/assignments/held-parameters/held-parameters.xhtml.

n.11 Mockapetris, P. Domain Names - Implementation and Specification, November 1987. RFC 1035, Internet Engineering Task Force.

n.12 Droms, R. Dynamic Host Configuration Protocol, March 1997. RFC 2131, Internet Engineering Task Force.

n.13 Rosenberg, J., Schulzrinne, H., Camarillo, G., Johnston, A., Peterson, J., Sparks, R., Handley, M. and Schooler, E. SIP: Session Initiation Protocol, June 2002. RFC 3261, Internet Engineering Task Force.

n.14 Rosenberg, J. and Schulzrinne, H. An Offer/Answer Model With the Session Description Protocol (SDP), June 2002. RFC 3264, Internet Engineering Task Force.

n.15 Roach, A. Session Initiation Protocol (SIP)-Specific Event Notification, June 2002. RFC 3265, Internet Engineering Task Force.

n.16 Sparks, R. The Session Initiation Protocol (SIP) Refer Method, April 2003. RFC 3515, Internet Engineering Task Force.

n.17 Schulzrinne, H., Casner, S., Frederick, R. and Jacobson, V. RTP: A Transport Protocol for Real-Time Applications, July 2003. RFC 3550, Internet Engineering Task Force.

n.18 Rosenberg, J. A Presence Event Package for the Session Initiation Protocol (SIP), August 2004. RFC 3856, Internet Engineering Task Force.

n.19 Sugano, H., Fujimoto, S., Klyne, G., Bateman, A., Carr,W. and Peterson, J. Presence Information Data Format (PIDF), August 2004. RFC 3863, Internet Engineering Task Force.

n.20 Berners-Lee, T., Fielding, R. and Masinter, L. Uniform Resource Identifier (URI): Generic Syntax, January 2005. RFC 3986, Internet Engineering Task Force.

n.21 Hellstrom, G. and Jones, P. RTP Payload for Text Conversation, June 2005. RFC 4103, Internet Engineering Task Force.

n.22 Peterson, J. A Presence-Based GEOPRIV Location Object Format, December 2005. RFC 4119, Internet Engineering Task Force.

n.23 Handley, M., Jacobson, V. and Perkins, C. SDP: Session Description Protocol, July 2006. RFC 4566, Internet Engineering Task Force.

n.24 Schulzrinne, H. and Tschofenig, H. Location Types Registry, July 2006. RFC 4589, Internet Engineering Task Force.

n.25 Schulzrinne, H. Dynamic Host Configuration Protocol (DHCPv4 and DHCPv6) Option for Civic Addresses Configuration Information, November 2006. RFC 4776, Internet Engineering Task Force.

n.26 Schulzrinne, H. A Uniform Resource Name (URN) for Emergency and Other Well-Known Services, January 2008. RFC 5031, Internet Engineering Task Force.

n.27 Thomson, M. and Winterbottom, J. Revised Civic Location Format for Presence Information Data Format Location Object (PIDF-LO), February 2008. RFC 5139, Internet Engineering Task Force.

n.28 vanWijk, A. and Gybels, G. Framework for Real-Time Text Over IP Using the Session Initiation Protocol (SIP), June 2008. RFC 5194, Internet Engineering Task Force.

n.29 Hardie, T., Newton, A., Schulzrinne, H. and Tschofenig, H. LoST: A Location-to-Service Translation Protocol, August 2008. RFC 5222, Internet Engineering Task Force.

n.30 Schulzrinne, H., Polk, J. and Tschofenig, H. Discovering Location-to-Service Translation (LoST) Servers Using the Dynamic Host Configuration Protocol (DHCP), August 2008. RFC 5223, Internet Engineering Task Force.

n.31 Winterbottom, J., Thomson, M. and Tschofenig, H. GEOPRIV Presence Information Data Format Location Object (PIDF-LO) Usage Clarification, Considerations, and Recommendations, March 2009. RFC 5491, Internet Engineering Task Force.

n.32 Schulzrinne, H. Location-to-URL Mapping Architecture and Framework, September 2009. RFC 5582, Internet Engineering Task Force.

n.33 Barnes, M. HTTP-Enabled Location Delivery (HELD), September 2010. RFC 5985, Internet Engineering Task Force.

n.34 Thomson, M. and Winterbottom, J. Discovering the Local Location Information Server (LIS), September 2010. RFC 5986, Internet Engineering Task Force.

n.35 Winterbottom, J., Tschofenig, H. and Barnes, R. Use of Device Identity in HTTP-Enabled Location Delivery (HELD), March 2011. RFC 6155, Internet Engineering Task Force.

n.36 Wenger, S., Hannuksela, M.M., Stockhammer, T., Westerlund, M. and Singer, D. RTP Payload Format for H.264 Video, February 2005. RFC 6280, Internet Engineering Task Force.

n.37 Rosen, B., Schulzrinne, H., Polk, J. and Newton, A. Framework for Emergency Calling Using Internet Multimedia, December 2011. RFC 6443, Internet Engineering Task Force.

n.38 Mahy, R., Rosen, B. and Tschofenig, H. Filtering Location Notifications in the Session Initiation Protocol (SIP), January 2012. RFC 6447, Internet Engineering Task Force.

n.39 Schulzrinne, H. and Tschofenig, H. Synchronizing Location-to-Service Translation (LoST) Protocol Based Service Boundaries and Mapping Elements, October 2012. RFC 6739, Internet Engineering Task Force.

n.40 Winterbottom, J., Tschofenig, H., Schulzrinne, H. and Thomson, M. A Location Dereference Protocol Using HTTP-Enabled Location Delivery (HELD), October 2012. RFC 6753, Internet Engineering Task Force.

n.41 Winterbottom, J., Thomson, M., Barnes, R., Rosen, B. and George, R. Specifying Civic Address Extensions in the Presence Information Data Format Location Object (PIDF-LO), January 2013. RFC 6848, Internet Engineering Task Force.

n.42 Bellis, R. Flow Identity Extension for HTTP-Enabled Location Delivery (HELD), April 2013. RFC 6915, Internet Engineering Task Force.

n.43 Schulzrinne, H., Tschofenig, H., Holmberg, C. and Patel, M. Public Safety Answering Point (PSAP) Callback, April 2014. RFC 7090, Internet Engineering Task Force.

n.44 Roach, A.B. SIP-Specific Event Notification, July 2012. RFC 6665, Internet Engineering Task Force.

n.45 Rehor, K., Portman L., Hutton, A., Jain, R. Use Cases and Requirements for SIP-Based Media Recording (SIPREC), August 2011. RFC 6341, Internet Engineering Task Force.

2.2 Informative References

The following referenced documents are not necessary for the application of the present document but they assist the user with regard to a particular subject area.

i.1 Barnes, R. and Lepinski, M. Using Imprecise Location for Emergency Context Resolution, July 2012. draftietf-ecrit-rough-loc-05 (work in progress), Internet Engineering Task Force.

i.2 Aboba, B. and Thomson, M. Emergency Services Support in WebRTC, June 2013. draft-aboba-rtcweb-ecrit-01, Internet Engineering Task Force.

i.3 Polk, J. Dynamic Host Configuration Protocol (DHCP) IPv4 and IPv6 Option for a Location Uniform Resource Identifier (URI), February 2013. draft-ietf-geopriv-dhcp-lbyr-uri-option-19 (work in progress), Internet Engineering Task Force.

i.4 Alvestrand, H. Overview: Real Time Protocols for Browser-Based Applications, June 2015. draft-ietfrtcweb-overview-14, Internet Engineering Task Force.

i.5 Rosen, B. Interior Location in the Presence Information Data Format - Location Object, March 2010. draftrosen-geopriv-pidf-interior-01 (expired), Internet Engineering Task Force.

i.6 Thomson, M., Winterbottom, J. and Barnes, M. Device Capability Negotiation for Device-Based Location Determination and Location Measurements in HELD, March 2011. draft-thomson-geopriv-held-capabilities-09 (expired), Internet Engineering Task Force.

i.7 Thomson, M. and Winterbottom, J. Location Measurements for IEEE 802.16e Devices, March 2011. draftthomson-geopriv-wimax-measurements-05 (expired), Internet Engineering Task Force.

i.8 Tschofenig, H. Emergency Services Functionality With the Extensible Messaging and Presence Protocol(XMPP), March 2012. draft-tschofenig-ecrit-xmpp-es-00 (work in progress), Internet Engineering Task Force.

i.9 ECMA. Technical Report TR/101, Next Generation Corporate Networks (NGCN) - Emergency Calls, 2nd Edition, December 2010. http://www.ecma-international.org/publications/techreports/E-TR-101.htm.

i.10 3GPP2. 3GPP2 C.S0084-006-0: Connection Control Plane for Ultra Mobile Broadband (UMB) Air Interface Specification, Version 2, August 2007.

i.11 3GPP. eCall Specifications Set to Save Lives, March 2009. http://www.3gpp.org/eCall.

i.12 ETSI. NGN Functional Architecture; Network Attachment Sub-System (NASS), Version 3.4.1, March 2010.

i.13 EMTEL. Emergency Communications (EMTEL); Test/Verification Procedure for Emergency Calls, Special Report ETSI 002 777 V1.1.1, June 2010. http://www.etsi.org/deliver/etsisr/002700002799/002777/01.01.0160/sr002777v010101p.pdf.

i.14 EMTEL. Emergency Communications (EMTEL); Basis of Requirements for Communication of IndividualsWithAuthorities/Organizations in Case of Distress (Emergency Call Handling), ETSI TR 102 180 V1.3.1, September 2011. http://www.etsi.org/deliver/etsitr/102100102199/102180/01.03.0160/tr102180v010301p.pdf.

i.15 3GPP. TS 22.004: General on Supplementary Services (Release 9), Version 9.0.0, December 2009.

i.16 3GPP. TS 22.071: Location Services (LCS); Service Description; Stage 1, Version 9.0.0, December 2009.

i.17 3GPP. TS 22.101: Service Aspects; Service Principles, Version 9.6.0, December 2009.

i.18 3GPP. TR 22.871: Study on Non-Voice Emergency Services, Release 11, Version 11.3.0, October 2011.

i.19 3GPP. TS 23.018: Basic Call Handling; Technical Realization, Version 9.0.0, December 2009.

i.20 3GPP. TS 23.221: Architectural Requirements, Version 9.2.0, December 2009.

i.21 3GPP. TS 23.228: Technical Specification Group Services and System Aspects; IP Multimedia Subsystem (IMS); Stage 2 (Release 7), Version 7.13.0, July 2008.

i.22 3GPP. TS 23.271: Functional Stage 2 Description of Location Services (LCS), Release 10, Version 10.2.0, March 2011.

i.23 3GPP. TS 24.008: Mobile Radio Interface Layer 3 Specification; Core Network Protocols; Stage 3, Version 9.1.0, December 2009.

i.24 3GPP. TS 24.301: Non-Access-Stratum (NAS) Protocol for Evolved Packet Services (EPS); Stage 3, Version 9.1.0, December 2009.

i.25 3GPP. TS 25.304: User Equipment (UE) Procedures in Idle Mode and Procedures for Cell Reselection in Connected Mode, Version 8.7.0, December 2009.

i.26 3GPP. TS 25.305: Stage 2 Functional Specification of User Equipment (UE) Positioning in UTRAN, Release 10, Version 10.0.0, October 2010.

i.27 3GPP. TS 25.331: Radio Resource Control (RRC); Protocol Specification, Version 11.2.0, July 2012. 98. 3GPP2. 3GPP2 C.S0022-0: Position Determination Service Standard for Dual Mode Spread Spectrum Systems, Version 3, February 2001.

i.28 3GPP. TS 29.214: Policy and Charging Control over Rx Reference Point; Stage 3, Version 7.11.0, January 2011.

i.29 3GPP. TS 29.273: Evolved Packet System (EPS); 3GPP EPS AAA Interfaces, Version 8.8.0, June 2011.

i.30 3GPP. TS 31.102: Characteristics of the Universal Subscriber Identity Module (USIM) Application, Version 9.1.0, December 2009.

i.31 3GPP. TS 36.304: Evolved Universal Terrestrial Radio Access (E-UTRA); User Equipment (UE) Procedures in Idle Mode, Version 9.0.0, December 2009.

i.32 3GPP. TS 36.305: Stage 2 Functional Specification of User Equipment (UE) Positioning in E-UTRAN, Release 10, Version 10.3.0, October 2011.

i.33 3GPP. TS 36.331: Evolved Universal Terrestrial Radio Access (E-UTRA); Radio Resource Control (RRC); Protocol Specification, Version 11.0.0, July 2012.

i.34 3GPP. TS 36.355: Evolved Universal Terrestrial Radio Access (E-UTRA); LTE Positioning Protocol (LPP), Version 11.0.0, September 2012.

i.35 3GPP. TS 43.022: Functions Related to Mobile Station (MS) in Idle Mode and Group Receive Mode, Version 9.0.0, December 2009.

i.36 3GPP. TS 43.059: Functional Stage 2 Description of Location Services (LCS) in GERAN, Release 10, Version 10.0.0, April 2011.

i.37 3GPP. TS 44.031: Location Services (LCS); Mobile Station (MS) - Serving Mobile Location Centre (SMLC) Radio Resource LCS Protocol (RRLP), Version 10.0.0, June 2011.

i.38 GML Application Schemas and Profiles. http://www.ogcnetwork.net/node/210.

i.39 IANA. Location Types Registry. http://www.iana.org/assignments/location-type-registry/.

i.40 IANA. PIDF-LO Method Tokens Registry. http://www.iana.org/assignments/methodtokens/method-tokens.xhtml.

i.41 International Standards Organization. ISO 3166-1: Codes for the Representation of Names of Countries and Their Subdivisions - Part 1: Country Codes, 2013.

i.42 Franks, J., Hallam-Baker, P., Hostetler, J., Lawrence, S., Leach, P., Luotonen, A. and Stewart, L. HTTP Authentication: Basic and Digest Access Authentication, June 1999. RFC 2617, Internet Engineering Task Force.

i.43 Aboba, B. and Simon, D. PPP EAP TLS Authentication Protocol,October 1999. RFC 2716, Internet Engineering Task Force.

i.44 Rescorla, E. HTTP Over TLS, May 2000. RFC 2818, Internet Engineering Task Force.

i.45 Rigney, C., Willens, S., Rubens, A. and Simpson, W. Remote Authentication Dial In User Service (RADIUS), June 2000. RFC 2865, Internet Engineering Task Force.

i.46 Patrick, M. DHCP Relay Agent Information Option, January 2001. RFC 3046, Internet Engineering Task Force.

i.47 Lennox, J., Schulzrinne, H. and Rosenberg, J. Common Gateway Interface for SIP, January 2001. RFC 3050, Internet Engineering Task Force.

i.48 Droms, R. and Arbaugh, W. Authentication for DHCP Messages, June 2001. RFC 3118, Internet Engineering Task Force.

i.49 Rosenberg, J. and Schulzrinne, H. Session Initiation Protocol (SIP): Locating SIP Servers, June 2002. RFC 3263, Internet Engineering Task Force.

i.50 Rosenberg, J. The Session Initiation Protocol (SIP) UPDATE Method, September 2002. RFC 3311, Internet Engineering Task Force.

i.51 Camarillo, G., Marshall, W. and Rosenberg, J. Integration of Resource Management and Session Initiation Protocol (SIP), October 2002. RFC 3312, Internet Engineering Task Force.

i.52 Droms, R., Bound, J., Volz, B., Lemon, T., Perkins, C. and Carney, M. Dynamic Host Configuration Protocol for IPv6 (DHCPv6), July 2003. RFC 3315, Internet Engineering Task Force.

i.53 Jennings, C., Peterson, J. and Watson, M. Private Extensions to the Session Initiation Protocol (SIP) for Asserted Identity Within Trusted Networks, November 2002. RFC 3325, Internet Engineering Task Force.

i.54 Campbell, B., Rosenberg, J., Schulzrinne, H., Huitema, C. and Gurle, D. Session Initiation Protocol (SIP) Extension for Instant Messaging, December 2002. RFC 3428, Internet Engineering Task Force.

i.55 Garcia-Martin, M., Henrikson, E. and Mills, D. Private Header (P-Header) Extensions to the Session Initiation Protocol (SIP) for the 3rd-Generation Partnership Project (3GPP, January 2003. RFC 3455, Internet Engineering Task Force.

i.56 Schulzrinne, H. and Casner, S. RTP Profile for Audio and Video Conferences With Minimal Control, July 2003. RFC 3551, Internet Engineering Task Force.

i.57 Calhoun, P., Loughney, J., Guttman, E., Zorn, G. and Arkko, J. Diameter Base Protocol, September 2003. RFC 3588, Internet Engineering Task Force.

i.58 Baugher, M., McGrew, D., Naslund, M., Carrara, E. and Norrman, K. The Secure Real-Time Transport Protocol (SRTP), March 2004. RFC 3711, Internet Engineering Task Force.

i.59 Aboba, B., Blunk, L., Vollbrecht, J., Carlson, J. and Levkowetz, H. Extensible Authentication Protocol (EAP), June 2004. RFC 3748, Internet Engineering Task Force.

i.60 Polk, J., Schnizlein, J. and Linsner, M. Dynamic Host Configuration Protocol Option for Coordinate-Based Location Configuration Information, July 2004. RFC 3825, Internet Engineering Task Force.

i.61 Atkins, D. and Austein, R. Threat Analysis of the Domain Name System (DNS), August 2004. RFC 3833, Internet Engineering Task Force.

i.62 Rosenberg, J., Schulzrinne, H. and Kyzivat, P. Caller Preferences for the Session Initiation Protocol (SIP), August 2004. RFC 3841, Internet Engineering Task Force.

i.63 Daigle, L. and Newton, A. Domain-Based Application Service Location Using SRV RRs and the Dynamic Delegation Discovery Service (DDDS), January 2005. RFC 3958, Internet Engineering Task Force.

i.64 Schulzrinne, H. The tel URI for Telephone Numbers, December 2004. RFC 3966, Internet Engineering Task Force.

i.65 Camarillo, G. and Kyzivat, P. Update to the Session Initiation Protocol (SIP) Preconditions Framework, March 2005. RFC 4032, Internet Engineering Task Force.

i.66 Arends, R., Austein, R., Larson, M., Massey, D. and Rose, S. DNS Security Introduction and Requirements, March 2005. RFC 4033, Internet Engineering Task Force.

i.67 Yon, D. and Camarillo, G. TCP-Based Media Transport in the Session Description Protocol (SDP), September 2005. RFC 4145, Internet Engineering Task Force.

i.68 Eronen, P. and Tschofenig, H. Pre-Shared Key Ciphersuites for Transport Layer Security (TLS), December 2005. RFC 4279, Internet Engineering Task Force.

i.69 Adoba, B., Beadless, M., Arkko, J. and Eronen, P. The Network Access Identifier, December 2005. RFC 4282, Internet Engineering Task Force.

i.70 Rescorla, E. and Modadugu, N. Datagram Transport Layer Security, April 2006. RFC 4347, Internet Engineering Task Force.

i.71 Peterson, J. and Jennings, C. Enhancements for Authenticated Identity Management in the Session Initiation Protocol (SIP), August 2006. RFC 4474, Internet Engineering Task Force.

i.72 Andreasen, F., Baugher, M. and Wing, D. Session Description Protocol (SDP) Security Descriptions for Media Streams, July 2006. RFC 4568, Internet Engineering Task Force.

i.73 Lazzaro, J. Framing Real-Time Transport Protocol (RTP) and RTP Control Protocol (RTCP) Packets Over Connection-Oriented Transport, July 2006. RFC 4571, Internet Engineering Task Force.

i.74 Lennox, J. Connection-Oriented Media Transport Over the Transport Layer Security (TLS) Protocol in the Session Description Protocol (SDP), July 2006. RFC 4572, Internet Engineering Task Force.

i.75 Schulzrinne, H., Tschofenig, H., Morris, J., Cuellar, J., Polk, J. and Rosenberg, J. Common Policy: A Document Format for Expressing Privacy Preferences, February 2007. RFC 4745, Internet Engineering Task Force.

i.76 Daigle, L. Domain-Based Application Service Location Using URIs and the Dynamic Delegation Discovery Service (DDDS), April 2007. RFC 4848, Internet Engineering Task Force.

i.77 Sjoberg, J., Westerlund, M., Lakaniemi, A. and Xie, Q. RTP Payload Format and File Storage Format for the Adaptive Multi-Rate (AMR) and Adaptive Multi-Rate Wideband (AMR-WB) Audio Codecs, April 2007. RFC 4867, Internet Engineering Task Force.

i.78 Rosen, B. Dial String Parameter for the Session Initiation Protocol Uniform Resource Identifier, July 2007. RFC 4967 , Internet Engineering Task Force.

i.79 Campbell, B., Mahy, R. and Jennings, C. The Message Session Relay Protocol (MSRP), September 2007. RFC 4975, Internet Engineering Task Force.

i.80 Schulzrinne, H. and Marshall, R. Requirements for Emergency Context Resolution With Internet Technologies, January 2008. RFC 5012, Internet Engineering Task Force.

i.81 Taylor, T., Tschofenig, H., Schulzrinne, H. and Shanmugam, M. Security Threats and Requirements for Emergency Call Marking and Mapping, January 2008. RFC 5069, Internet Engineering Task Force.

i.82 Dierks, T. and Rescorla, E. The Transport Layer Security (TLS) Protocol - Version 1.2, August 2008. RFC 5246, Internet Engineering Task Force.

i.83 Johnston, A., Sparks, R., Cunningham, C., Donovan, S. and Summers, K. Session Initiation Protocol Service Examples, October 2008. RFC 5359, Internet Engineering Task Force.

i.84 Rosenberg, J., Mahy, R., Matthews, P. and Wing, D. Session Traversal Utilities for NAT (STUN), October 2008.RFC 5389, Internet Engineering Task Force.

i.85 Wing, D., Fries, S., Tschofenig, H. and Audet, F. Requirements and Analysis of Media Security Management Protocols, April 2009. RFC 5479, Internet Engineering Task Force.

i.86 Tschofenig, H., Adrangi, F., Jones, M., Lior, A. and Aboba, B. Carrying Location Objects in RADIUS and Diameter, August 2009. RFC 5580, Internet Engineering Task Force.

i.87 Tschofenig, H. and Schulzrinne, H. GEOPRIV Layer 7 Location Configuration Protocol: Problem Statement and Requirements, March 2010. RFC 5687, Internet Engineering Task Force.

i.88 Fischl, J., Tschofenig, H. and Rescorla, E. Framework for Establishing a Secure Real-Time Transport Protocol (SRTP) Security Context Using Datagram Transport Layer Security (DTLS), May 2010. RFC 5763, Internet Engineering Task Force.

i.89 McGrew, D. and Rescorla, E. Datagram Transport Layer Security (DTLS) Extension to Establish Keys for the Secure Real-Time Transport Protocol (SRTP), May 2010. RFC 5764, Internet Engineering Task Force.

i.90 Wolf, K. and Mayrhofer, A. Considerations for Civic Addresses in the Presence Information Data Format Location Object (PIDF-LO): Guidelines and IANA Registry Definition, March 2010. RFC 5774, Internet Engineering Task Force.

i.91 Marshall, R. Requirements for a Location-by-Reference Mechanism, May 2010. RFC 5808, Internet Engineering Task Force.

i.92 Bradner, S., Conroy, L. and Fujiwara, K. The E.164 to Uniform Resource Identifiers (URI) Dynamic Delegation Discovery System (DDDS) Application (ENUM), March 2011. RFC 6116, Internet Engineering Task Force.

i.93 Polk, J., Linsner, M., Thomson, M. and Aboba, B. Dynamic Host Configuration Protocol Option for Coordinate-Based Location Configuration Information, July 2011. RFC 6225, Internet Engineering Task Force.

i.94 Barnes, R., Lepinski, M., Cooper, A., Morris, J., Tschofenig, H. and Schulzrinne, H. An Architecture for Location and Location Privacy in Internet Applications, July 2011. RFC 6280, Internet Engineering Task Force.

i.95 Polk, J. and Rosen, B. Location Conveyance for the Session Initiation Protocol, December 2011. RFC 6442, Internet Engineering Task Force.

i.96 Schulzrinne, H., Liess, L., Tschofenig, H., Stark, B. and Kuett, A. Location Hiding: Problem Statement and Requirements, January 2012. RFC 6444, Internet Engineering Task Force.

i.97 Niemi, A., Kiss, K. and Loreto, S. Session Initiation Protocol (SIP) Event Notification Extension for Notification Rate Control, January 2012. RFC 6446, Internet Engineering Task Force.

i.98 Rosen, B. and Polk, J. Best Current Practice for Communications Services in Support of Emergency Calling, March 2013. RFC 6881, Internet Engineering Task Force.

i.99 Thomson, M. and Winterbottom, J. Using Device-Provided Location-Related Measurements in Location Configuration Protocols, January 2014. RFC 7105, Internet Engineering Task Force.

i.100 Polk, J. Registering a SIP Resource Priority Header Field Namespace for Local Emergency Communications, May 2014. RFC 7135. Internet Engineering Task Force.

i.101 Barnes, R., Thomson, M., Winterbottom, J. and Tschofenig, H. Location Configuration Extensions for Policy Management, April 2014. RFC 7199, Internet Engineering Task Force.

i.102 Thomson, M. and Bellis, R. Location Information Server (LIS) Discovery Using IP Addresses and Reverse DNS, April 2014. RFC 7216, Internet Engineering Task Force.

i.103 Tschofenig, H., Eggert, L. and Sarker, Z. Report from the IAB/IRTF Workshop on Congestion Control for Interactive Real-Time Communication, July 2014. RFC 7295, Internet Engineering Task Force.

i.104 Tschofenig, H., Schulzrinne, H. and Aboba, B. Trustworthy Location, December 2014. RFC 7378, Internet Engineering Task Force.

i.105 Schulzrinne, H., McCann, S., Bajko, G., Tschofenig, H. and Kroeselberg, D. Extensions to the Emergency Services Architecture for Dealing With Unauthenticated and Unauthorized Devices, December 2014. RFC 7406, Internet Engineering Task Force.

i.106 Popescu, A. W3C Geolocation API Specification, September 2010. http://www.w3.org/TR/2010/CRgeolocation-API-20100907/, W3C Candidate Recommendation.

i.107 Wolf, K.H. Mozilla SIP Client Zap With Emergency Services Extensions, September 2011. http://ecrit.labs.nic.at.

3 Abbreviations

APP	Application
BCF	Border Control Function
DUT	Device Under Test
ECRF	Emergency Call Routing Function
ESRP	Emergency Service Routing Proxy
EUT	Equipment Under Test
FE	Functional Element
GW	Gateway
HeLD	HTTP enabled Location Delivery
IFS	Interoperable Functions Statement
IMS	IP Multimedia Subsystem
IP	Internet Protocol
LAN	Local Area Network
LIF	Loction Interwork Function
LIS	Location Information Service
LNG	Legacy Network Gateway
LOC	Location
LOG	Logging
LRF	Location Retrieval Function
LoST	Location to Service Translation
NAPTR	Naming Authority Pointer
NG	Next Generation
NIF	NG112 Interwork Function
NW	Network
OTT	Over the Top
PSAP	Public Safety Answering Point
RAN	Radio Access Network
REC	Recording
RTP	Real-time Transport Protocol
SIP	Session Inititation Protocol
SRV	Service (Record)
TC	Total Conversation
TD	Test Description
UC	Unified Communications
UE	User Equipment
WAN	Wide Area Network

4 Conventions

4.1 Test Description Proforma

A Test Description (TD) is a detailed description of the process that needs to be followed to test one or more inter operable functionalities between two or more vendor implementations. A TD should include as a minimum the following elements: The following different types are defined:

Interoperability Test Description			
Identifier	*a unique test description identifier should follow a well-defined naming convention, e.g.: TD/AB/XX/00*		
Test Objective	*a concise summary of the test, which should reflect its purpose and allow readers to easily distinguish this test from any other test in the document*		
Configuration	- *list of all the required equipment for running this test, possibly also including a (reference to) an illustration of a test architecture or test configuration*		
References	- *list of references to the base specification section(s), use case(s), requirement(s), etc. which are either used in the test or define the functionality being tested*		
Applicability	- *list of features and capabilities in the IFS which are required to be supported by the SUT in order to execute this test (e.g. if this list contains an optional feature to be supported, then the test is optional)*		
Pre-test conditions	- *list of test specific pre-conditions that need to be met by the SUT including information about equipment configuration, i.e. precise description of the initial state of the SUT prior to start executing the test sequence*		
Test Sequence	**Step**	**Type**	**Description**
	1 2 3	*<type>*	*step description*
Notes	- *optional list of explanatory notes*		

- A **stimulus** corresponds to an event that triggers an EUT to proceed with a specific protocol action, like sending a message for instance.
- A **check** step consists of verifying that the EUT behaves according to the expected behaviour (for instance the EUT behaviour shows that it receives the expected message).
- A **configure** corresponds to an action to modify the EUT configuration.
- A **verify** step consists of verifying that the tested scenario provides expected results (for instance an emergency call is received at the correct PSAP and media is transmitted).

Each check step consists of the receipt of protocol messages on reference points, with valid content. The check should be performed using a trace created by a monitor tool.

4.2 Interoperable Functions Statement

The "Interoperable Functions Statement" (IFS) identifies the standardised functions of a DUT. These functions can be mandatory, optional or conditional (depending on other functions), and depend on the role played by the DUT. The IFS can also be used as a proforma by a vendor to identify the functions that its DUT will support when interoperating with corresponding functions from other vendors.

5 Configurations

5.1 CFG_BASIC_LAB-1

CFG_BASIC_LAB-1 is shown in Fig. 2. UE, SIP Proxy and a default PSAP are required. UEs may connect via a 4G data bearer. Any UE registers with the SIP Proxy and the SIP Proxy forwards emergency calls to a configured PSAP.

This configuration is used for basic connectivity tests and comprises signaling and media interfaces as shown in Fig. 3

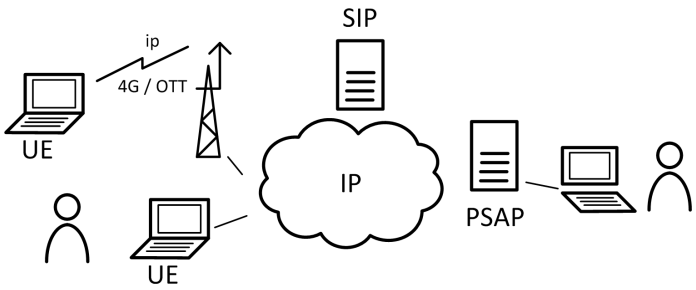

Figure 2: CFG_BASIC_LAB-1 Scheme

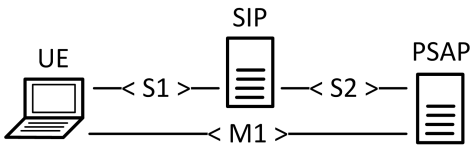

Figure 3: CFG_BASIC_LAB-1 Interfaces

5.2 CFG_BASIC_IP-1

CFG_BASIC_IP-1 is shown in Fig. 4. UE, SIP Proxy, BCF, ESRP, and a default PSAP are required. Any UE registers with the SIP Proxy and the SIP Proxy forwards emergency calls to a configured BCF.

This configuration is used for basic emergency call routing where calls originate from an IP network that connects to a PSAP and comprises signaling and media interfaces as shown in Fig. 5.

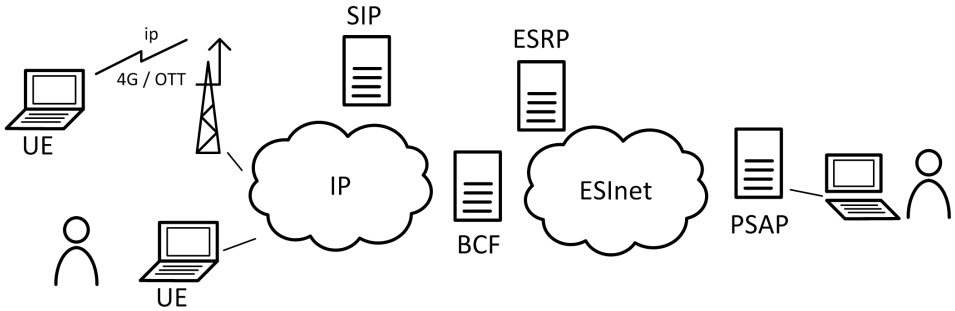

Figure 4: CFG_BASIC_IP-1 Scheme

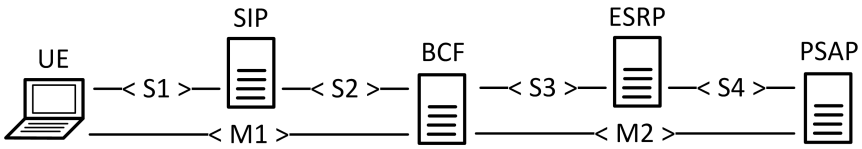

Figure 5: CFG_BASIC_IP-1 Interfaces

5.3 CFG_BASIC_IMS-1

CFG_BASIC_IMS-1 is shown in Fig. 6. UE, IMS, BCF, ESRP, and a default PSAP are required. Any UE registers with the IMS (emergency bearer) and the IMS forwards emergency calls to a configured BCF.

This configuration is used for basic emergency call routing where calls originate from an IMS that connects to an ESInet and comprises signaling and media interfaces as shown in Fig. 7.

Note: The term IMS is used synonym for IMS functional elements that route emergency calls.

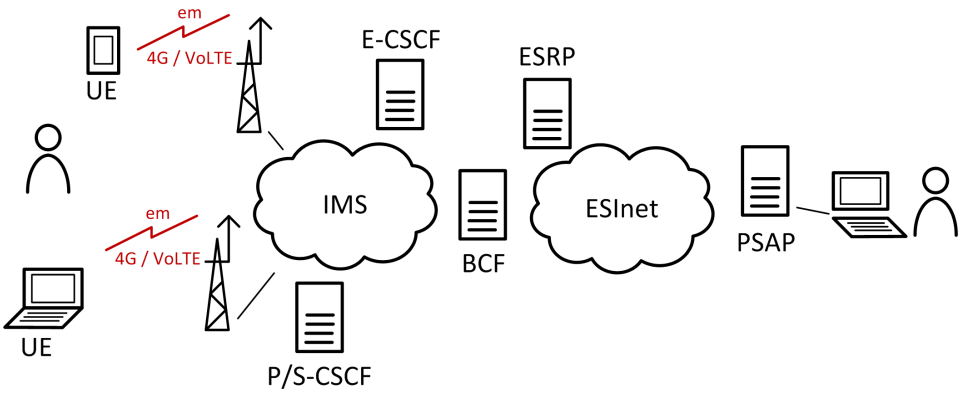

Figure 6: CFG_BASIC_IMS-1 Scheme

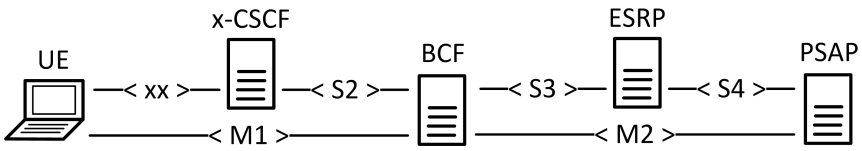

Figure 7: CFG_BASIC_IMS-1 Interfaces

5.4 CFG_BASIC_UC-1

CFG_BASIC_UC-1 is shown in Fig. 8. UE, UC, BCF, ESRP and a default PSAP are required. Any UE registers with the UC (soft switch) and the UC forwards emergency calls to a configured BCF.

This configuration is used for basic emergency call routing where calls originate from an UC that connects to an ESInet and comprises signaling and media interfaces as shown in Fig. 9.

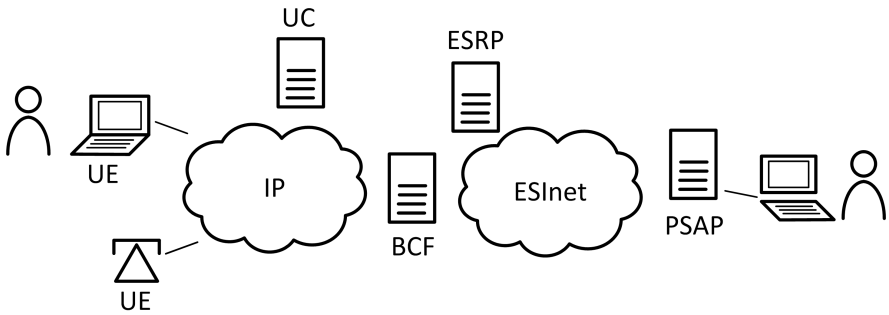

Figure 8: CFG_BASIC_UC-1 Scheme

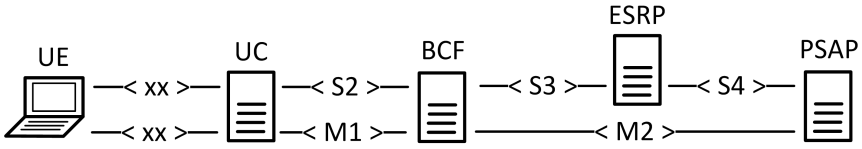

Figure 9: CFG_BASIC_UC-1 Interfaces

5.5 CFG_BASIC_PSTN-1

CFG_BASIC_PSTN-1 is shown in Fig. 10. UE, LNG, BCF, ESRP, and a default PSAP are required. Any UE terminates at the LNG and the LNG sends emergency calls to a configured BCF.

This configuration is used for basic emergency call routing where emergency calls originate from a PSTN that connects via an LNG to an ESInet and comprises signaling and media interfaces as shown in Fig. 11.

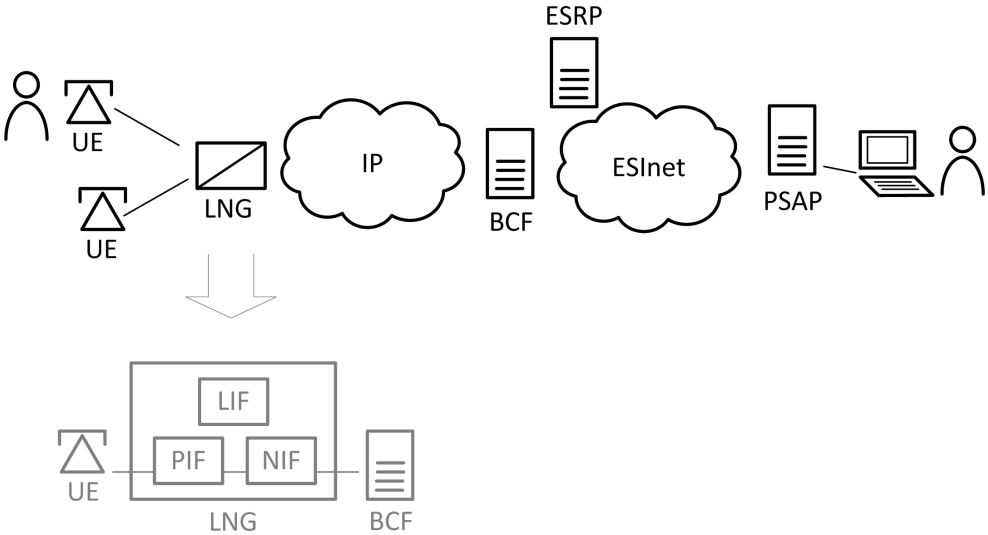

Figure 10: CFG_BASIC_PSTN-1 Schema

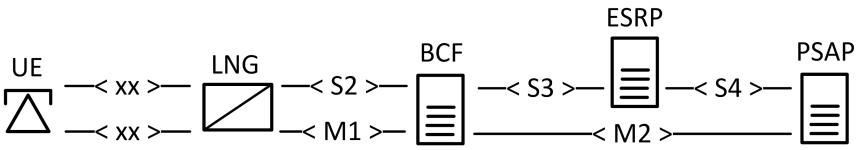

Figure 11: CFG_BASIC_PSTN-1 Interfaces

5.6 CFG_NGCS_IP-1

CFG_NGCS_IP-1 is shown in Fig. 12. UE, SIP Proxy, LIS, BCF, ESRP, ECRF, LOG/REC and PSAPs are required. Any UE registers with the SIP Proxy and the SIP Proxy forwards emergency calls to a configured BCF. Location information is retrieved from a LIS either by the UE or any capable FE within the ESInet.

This configuration is used for emergency call routing where emergency calls originate from an IP network that connects to an ESInet and comprises signaling and media interfaces as shown in Fig. 13. Further, emergency calls are routed based on location information, events are logged and media is recorded.

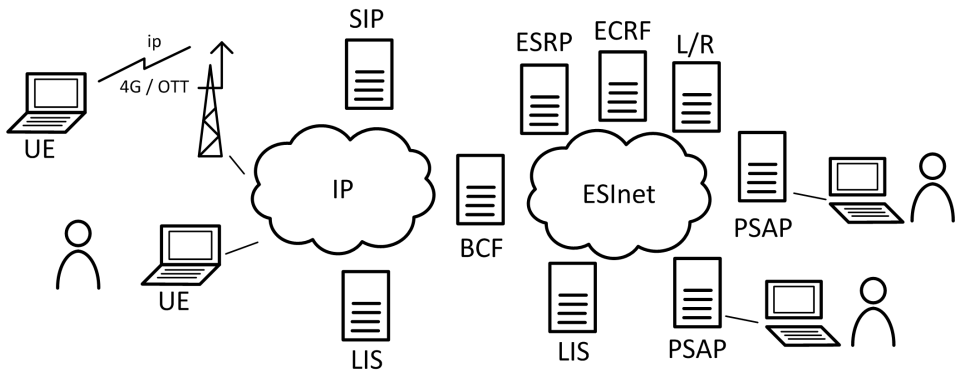

Figure 12: CFG_NGCS_IP-1 Scheme

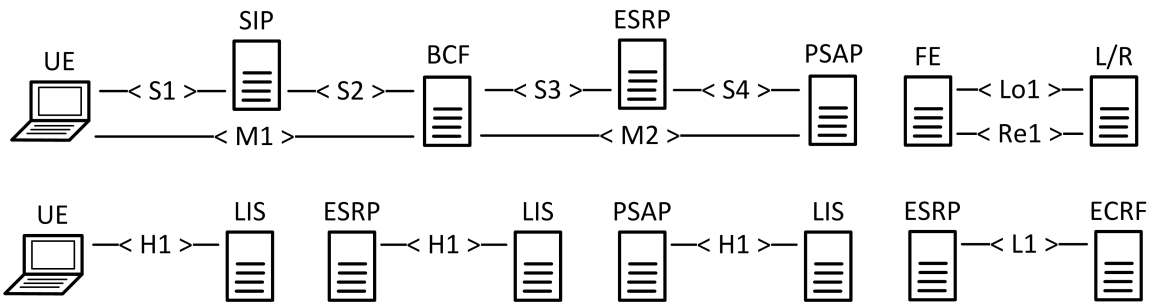

Figure 13: CFG_NGCS_IP-1 Interfaces

5.7 CFG_NGCS_IMS-1

CFG_NGCS_IMS-1 is shown in Fig. 14. UE, IMS, LRF, LIS, BCF, ESRP, ECRF, LOG/REC and PSAP are required. Any UE registers with the IMS (emergency bearer) and the IMS forwards emergency calls to a configured BCF. Location information is either provided by the IMS (reference or value) or retrieved from the LIS by any capable FE within the ESInet.

This configuration is used for emergency call routing where emergency calls originate from an IMS that connects to an ESInet and comprises signaling and media interfaces as shown in Fig. 15. Further, emergency calls are routed based on location information, events are logged and media is recorded.

Note: The term IMS is used synonym for IMS functional elements that route emergency calls.

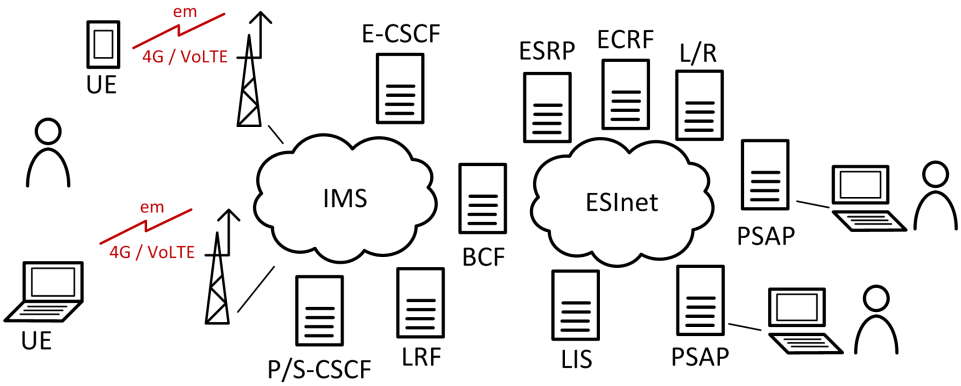

Figure 14: CFG_NGCS_IMS-1 Scheme

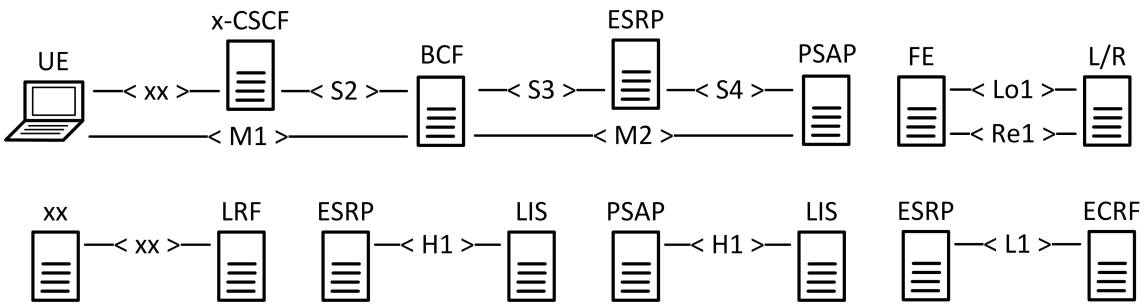

Figure 15: CFG_NGCS_IMS-1 Interfaces

5.8 CFG_NGCS_UC-1

CFG_NGCS_UC-1 is shown in Fig. 16. UE, UC, LIS, BCF, ESRP, ECRF, LOG/REC and PSAP are required. Any UE registers with the UC (soft switch) and the UC forwards emergency calls to a configured BCF. Location information is either provided by the UC (reference or value) or retrieved from the LIS by any capable FE within the ESInet.

This configuration is used for emergency call routing where emergency calls originate from an UC that connects to an ESInet and comprises signaling and media interfaces as shown in Fig. 17. Further, emergency calls are routed based on location information, events are logged and media is recorded.

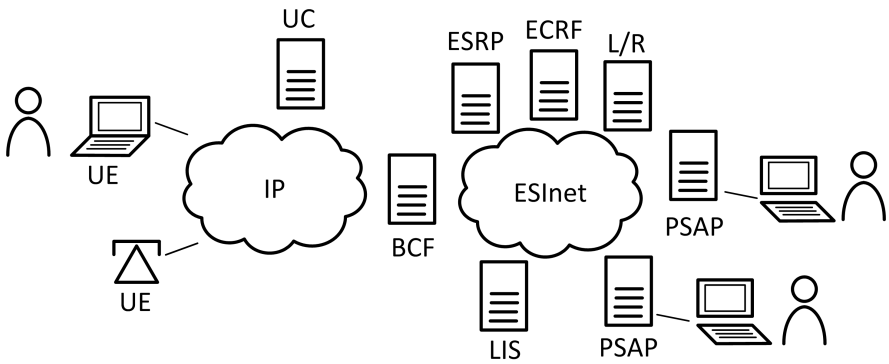

Figure 16: CFG_NGCS_UC-1 Scheme

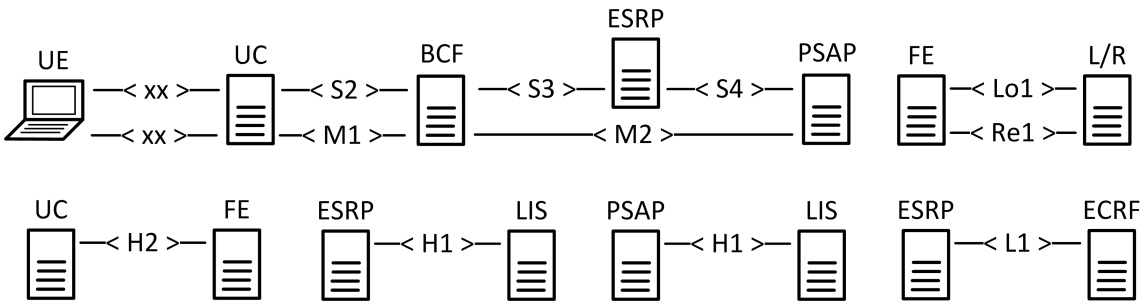

Figure 17: CFG_NGCS_UC-1 Interfaces

5.9 CFG_NGCS_PSTN-1

CFG_NGCS_PSTN-1 is shown in Fig. 18. UE, LNG, LIS, BCF, ESRP, ECRF, LOG/REC and PSAP are required. Any UE terminates a the LNG and the LNG sends emergency calls to a configured BCF. Location information is retrieved from a LIS either by the LNG or any capable FE within the ESInet.

This configuration is used for emergency call routing where emergency calls originate from a PSTN that connects via a LNG to an ESInet and comprises signaling and media interfaces as shown in Fig. 19. Further, emergency calls are routed based on location information, events are logged and media is recorded.

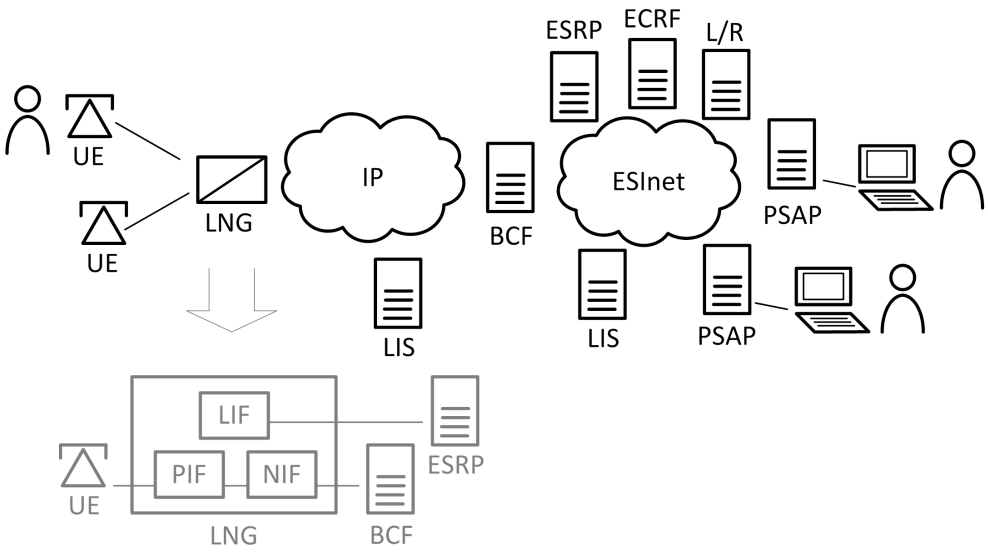

Figure 18: CFG_NGCS_PSTN-1 Schema

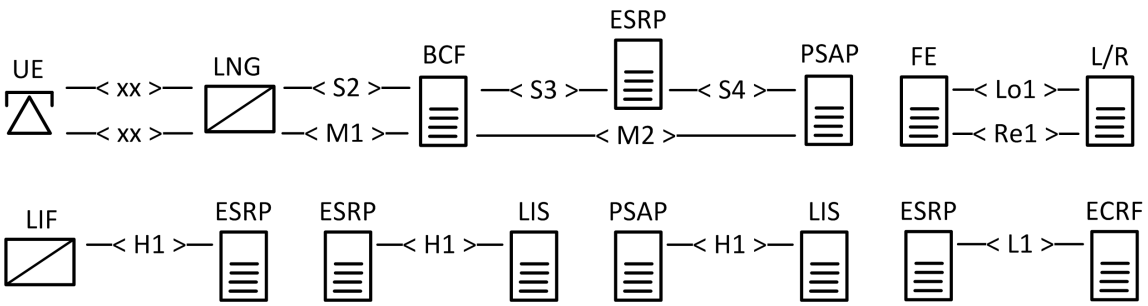

Figure 19: CFG_NGCS_PSTN-1 Interfaces

6 Interoperable Functions Statement (IFS)

6.1 Entities

Table 1: Entities

Item	Which entity do you support?	Status	Support
1	UE		
2	IMS		
3	UC		
4	PIF (LNG)		
5	NIF (LNG)		
6	LIF (LNG)		
7	BCF		
8	LIS		
9	ESRP		
10	ECRF		
11	L/R		
12	PSAP		

6.2 UE Features

Table 2: UE features

Item	Feature	ID	Ref	Status	Support
1	Does the UE support SIP?	UE_SIP	n.13		
2	Does the UE support RTP?	UE_RTP	n.17		
3	Does the UE support G.711?	UE_G711	n.17		
4	Does the UE support H.264?	UE_H264	n.36		
5	Does the UE support Real-time Text?	UE_RTT	n.21		
6	Does the UE support GPS?	UE_GPS			
7	Does the UE support PIDF/LO?	UE_PFL	n.22 n.27		
8	Does the UE support service URNs?	UE_URN	n.26		

6.3 IMS Features

Table 3: IMS features

Item	Feature	ID	Ref	Status	Support
1	Does the IMS support SIP?	IMS_SIP	n.13		
2	Does the IMS support RTP?	IMS_RTP	n.17		
3	Does the IMS support G.711?	IMS_G711	n.17		
4	Does the IMS support H.264?	IMS_H264	n.36		
5	Does the IMS support Real-time Text?	IMS_RTT	n.21		
6	Does the IMS support HELD?	IMS_HELD	n.10 n.33 n.35 n.40 n.42		
7	Does the IMS support NG specific SIP Header?	IMS_NGS	n.1		
8	Does the IMS support PIDF/LO?	IMS_PFL	n.22 n.27		
9	Does the IMS support service URNs?	IMS_URN	n.26		

6.4 UC Features

Table 4: UC features

Item	Feature	ID	Ref	Status	Support
1	Does the UC support SIP?	UC_SIP	n.13		
2	Does the UC support RTP?	UC_RTP	n.17		
3	Does the UC support G.711?	UC_G711	n.17		
4	Does the UC support H.264?	UC_H264	n.36		
5	Does the UC support PIDF/LO?	UC_PFL	n.22 n.27		
6	Does the UC support service URNs?	UC_URN	n.26		

6.5 PIF Features

Table 5: PIF features

Item	Feature	ID	Ref	Status	Support
1	Does the PIF support SIP?	PIF_SIP	n.13		
2	Does the PIF support RTP?	PIF_RTP	n.17		
3	Does the PIF support G.711?	PIF_G711	n.17		

6.6 NIF Features

Table 6: NIF features

Item	Feature	ID	Ref	Status	Support
1	Does the NIF support SIP?	NIF_SIP	n.13		
2	Does the NIF support RTP?	NIF_RTP	n.17		
3	Does the NIF support G.711?	NIF_G711	n.17		
4	Does the NIF support NG specific SIP Header?	NIF_NGS	n.1		
5	Does the NIF support service URNs?	NIF_URN	n.26		
6	Does the NIF support NG Logging?	NIF_LOG	n.1		
7	Does the NIF support NG Recording?	NIF_REC	n.45		

6.7 LIF Features

Table 7: LIF features

Item	Feature	ID	Ref	Status	Support
1	Does the LIF support PIDF/LO?	LIF_PFL	n.22 n.27		
2	Does the LIF support HELD?	LIF_HELD	n.10 n.33 n.35 n.40 n.42		

6.8 BCF Features

Table 8: BCF features

Item	Feature	ID	Ref	Status	Support
1	Does the BCF support SIP?	BCF_SIP	n.13		
2	Does the BCF support RTP?	BCF_RTP	n.17		
3	Does the BCF support G.711?	BCF_G711	n.17		
4	Does the BCF support H.264?	BCF_H264	n.36		
5	Does the BCF support HELD?	BCF_HELD	n.10 n.33 n.35 n.40 n.42		
6	Does the BCF support NG specific SIP Header?	BCF_NGS	n.1		
7	Does the BCF support PIDF/LO?	BCF_PFL	n.22 n.27		
8	Does the BCF support service URNs?	BCF_URN	n.26		
9	Does the BCF support NG Logging?	BCF_LOG	n.1		
10	Does the BCF support NG Recording?	BCF_REC	n.45		
11	Does the BCF support Real-time Text?	BCF_RTT	n.21		

6.9 LIS Features

Table 9: LIS features

Item	Feature	ID	Ref	Status	Support
1	Does the LIS support HELD?	LIS_HELD	n.10 n.33 n.35 n.40 n.42		
2	Does the LIS support SIP SUBSCRIBE/NOTIFY location update?	LIS_SIPLO	n.1 n.44 n.22		
3	Does the LIS support PIDF/LO?	LIS_PFL	n.22 n.27		

6.10 ESRP Features

Table 10: ESRP features

Item	Feature	ID	Ref	Status	Support
1	Does the ESRP support SIP?	ESRP_SIP	n.13		
2	Does the ESRP support SIP SUBSCRIBE/NOTIFY location update?	ESRP_SIPLO	n.1 n.44 n.22		
3	Does the ESRP support SIP SUBSCRIBE/NOTIFY queue events?	ESRP_SIPQU	n.1		
4	Does the ESRP support HELD?	ESRP_HELD	n.10 n.33 n.35 n.40 n.42		
5	Does the ESRP support dequeue registration?	ESRP_DEQU	n.1		
6	Does the ESRP support LoST?	ESRP_LOST	n.29 n.30		
7	Does the ESRP support policy routing function?	ESRP_PRF	n.1		
8	Does the ESRP support PIDF/LO?	ESRP_PFL	n.22 n.27		
9	Does the ESRP support service URNs?	ESRP_URN	n.26		
10	Does the ESRP support NG Logging?	ESRP_LOG	n.1		

6.11 ECRF Features

Table 11: ECRF features

Item	Feature	ID	Ref	Status	Support
1	Does the ECRF support LoST?	ECRF_LOST	n.29 n.30		
2	Does the ECRF support PIDF/LO?	ECRF_PFL	n.22 n.27		
3	Does the ECRF support service URNs?	ECRF_URN	n.26		
4	Does the ECRF support NG Logging?	ECRF_LOG	n.1		

6.12 PSAP Features

Table 12: PSAP features

Item	Feature	ID	Ref	Status	Support
1	Does the PSAP support SIP?	PSAP_SIP	n.13		
2	Does the PSAP support RTP?	PSAP_RTP	n.17		
3	Does the PSAP support G.711?	PSAP_G711	n.17		
4	Does the PSAP support H.264?	PSAP_H264	n.36		
5	Does the PSAP support Real-time Text?	PSAP_RTT	n.21		
6	Does the PSAP support SIP SUBSCRIBE/NOTIFY location update?	PSAP_SIPLO	n.1 n.44 n.22		
7	Does the PSAP support SIP SUBSCRIBE/NOTIFY queue events?	PSAP_SIPQU	n.1		
8	Does the PSAP support HELD?	PSAP_HELD	n.10 n.33 n.35 n.40 n.42		
9	Does the PSAP support PIDF/LO?	PSAP_PFL	n.22 n.27		
10	Does the PSAP support dequeue registration?	PSAP_DEQU	n.1		
11	Does the PSAP support service URNs?	PSAP_URN	n.26		
12	Does the PSAP support NG Logging?	PSAP_LOG	n.1		
13	Does the PSAP support NG Recording?	PSAP_REC	n.45		

6.13 LOG & REC Features

Table 13: LOG & REC features

Item	Feature	ID	Ref	Status	Support
1	Does the L/R support NG Logging?	L/R_LOG	n.1		
2	Does the L/R support NG Recording?	L/R_REC	n.45		

7 Test Descriptions

7.1 Connectivity (CN)

7.1.1 CN/BASIC/01

This test shall verify end-to-end connectivity between UE and PSAP for admininistrative calls.

Message Sequence Diagram

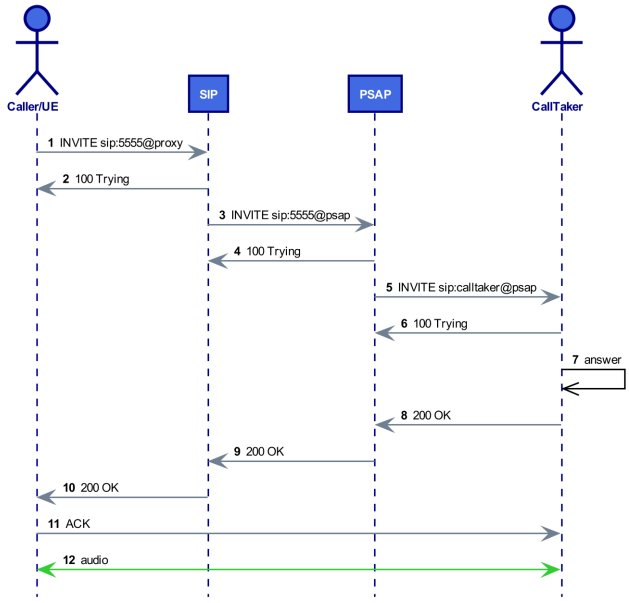

Figure 20: CN/BASIC/01 Message Sequence

Message Details

```
1 INVITE Caller/UE --> SIP Proxy

INVITE sip:5555@proxy SIP/2.0
Via: SIP/2.0/UDP 10.1.12.70;branch=z9hG4bK776asdhds
Max-Forwards: 70
To: <sip:5555@provider>
From: Alice <sip:alice@atlanta.com>;tag=1928301774
Call-ID: a84b4c76e66710@10.1.12.70
CSeq: 314159 INVITE
Contact: <sip:alice@10.1.12.70>
Content-Type: application/sdp
...
m=audio 37500 RTP/AVP 0 8
a=rtpmap:0 PCMU/8000
a=rtpmap:8 PCMA/8000
...
```

Interoperability Test Description

Table 14: CN/BASIC/01

Interoperability Test Description			
Identifier	CN/BASIC/01		
Test Objective	Veriy connectivity between UE (IP) and PSAP with basic call		
Configuration	- CFG_BASIC_LAB-1 (5.1)		
References	- SIP (n.13) - RTP (n.17)		
Applicability	- UE_SIP, UE_RTP, UE_G711 (6.2) - PSAP_SIP, PSAP_RTP, PSAP_G711 (6.12)		
Pre-test conditions	- IP connectivity among all elements of the specific scenario - UE configured to register with SIP Proxy/Registrar - SIP proxy trigger points for administrative call routing		
Test Sequence	**Step**	**Type**	**Description**
	1	stimulus	User dials dials admin. number (e.g. 5555)
	2	check	Dialog creating INVITE received at SIP proxy
	3	check	Dialog creating INVITE received at PSAP
	4	check	SIP dialog established
	5	verify	Call connected and media exchanged

7.1.2 CN/NGCS/01

This test shall verify end-to-end connectivity between UE and PSAP for emergency calls including IP access and NG core services.

Message Sequence Diagram

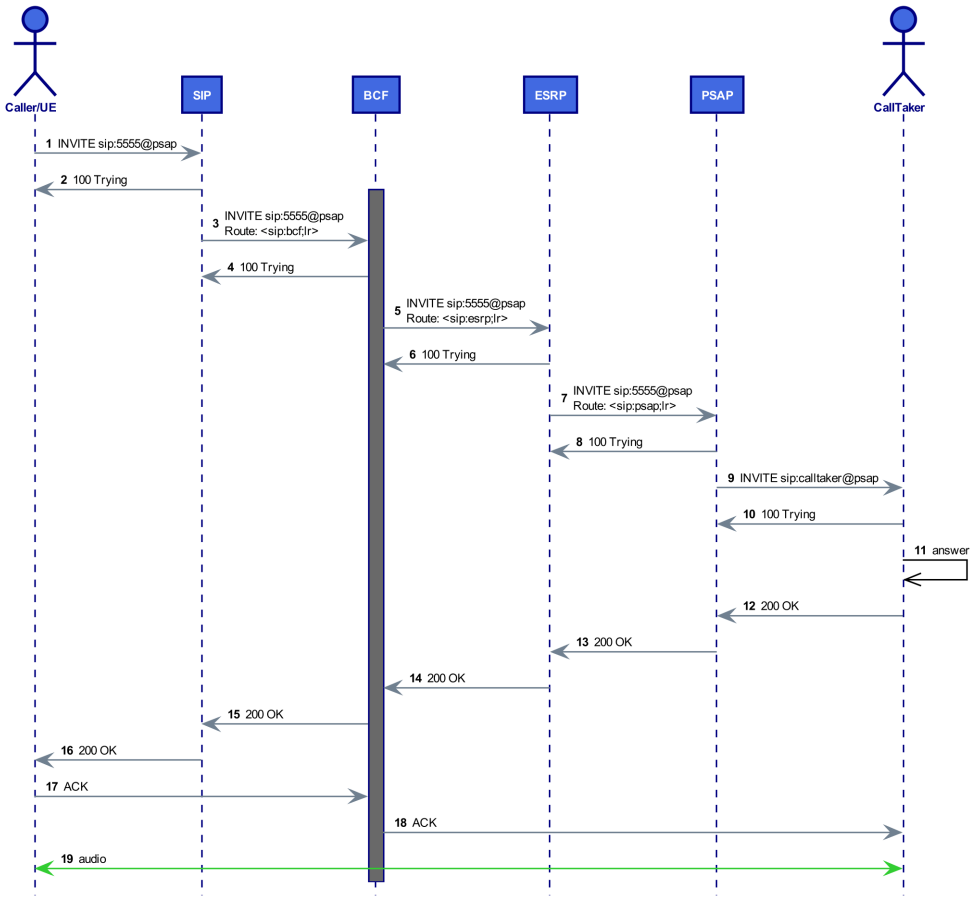

Figure 21: CN/NGCS/01 Message Sequence

Message Details

```
3 INVITE SIP Proxy --> BCF

INVITE sip:5555@bcf SIP/2.0
Via: SIP/2.0/UDP 10.1.70.21;branch=z9hG4bK7gdfgfhhrf
Via: SIP/2.0/UDP 10.1.12.70;branch=z9hG4bK776asdhds
Max-Forwards: 70
To: <sip:5555@provider>
From: Alice <sip:alice@atlanta.com>;tag=1928301774
Call-ID: a84b4c76e66710@10.1.12.70
CSeq: 314159 INVITE
Contact: <sip:alice@10.1.12.70>
Content-Type: application/sdp
...
m=audio 37500 RTP/AVP 0 8
a=rtpmap:0 PCMU/8000
a=rtpmap:8 PCMA/8000
...
```

Interoperability Test Description

Table 15: CN/NGCS/01

Interoperability Test Description			
Identifier	CN/NGCS/01		
Test Objective	Veriy connectivity between UE (IP) and PSAP with emergency call including NG core services		
Configuration	- CFG_NGCS_IP-1 (5.6)		
References	- SIP (n.13) - RTP (n.17) - URN (n.26) - LTD (n.1)		
Applicability	- UE_SIP, UE_RTP, UE_G711 (6.2) - BCF_SIP, BCF_RTP, BCF_URN, BCF_NGS (6.8) - ESRP_SIP, ESRP_URN, ESRP_NGS (6.10) - PSAP_SIP, PSAP_RTP, PSAP_G711, PSAP_URN, PSAP_NGS (6.12)		
Pre-test conditions	- IP connectivity among all elements of the specific scenario - UE configured to register with SIP Proxy/Registrar - SIP Proxy trigger points for emergency call routing (to BCF) - BCF, ESRP default trigger points for emergency call routing		
Test Sequence	**Step**	**Type**	**Description**
	1	stimulus	User dials emergency number (e.g. 112)
	2	check	Dialog creating INVITE received at BCF
	3	check	Dialog creating INVITE at default ESRP
	4	check	Dialog creating INVITE received at default PSAP
	5	check	SIP dialog established
	6	verify	Call connected
	7	verify	Use of urn:service:sos as request URI
	8	verify	Use of NG specific SIP header

7.1.3 CN/NGCS/02

This test shall verify end-to-end connectivity between UE and PSAP for emergency calls including IMS/VoLTE access and NG core services.

Message Sequence Diagram

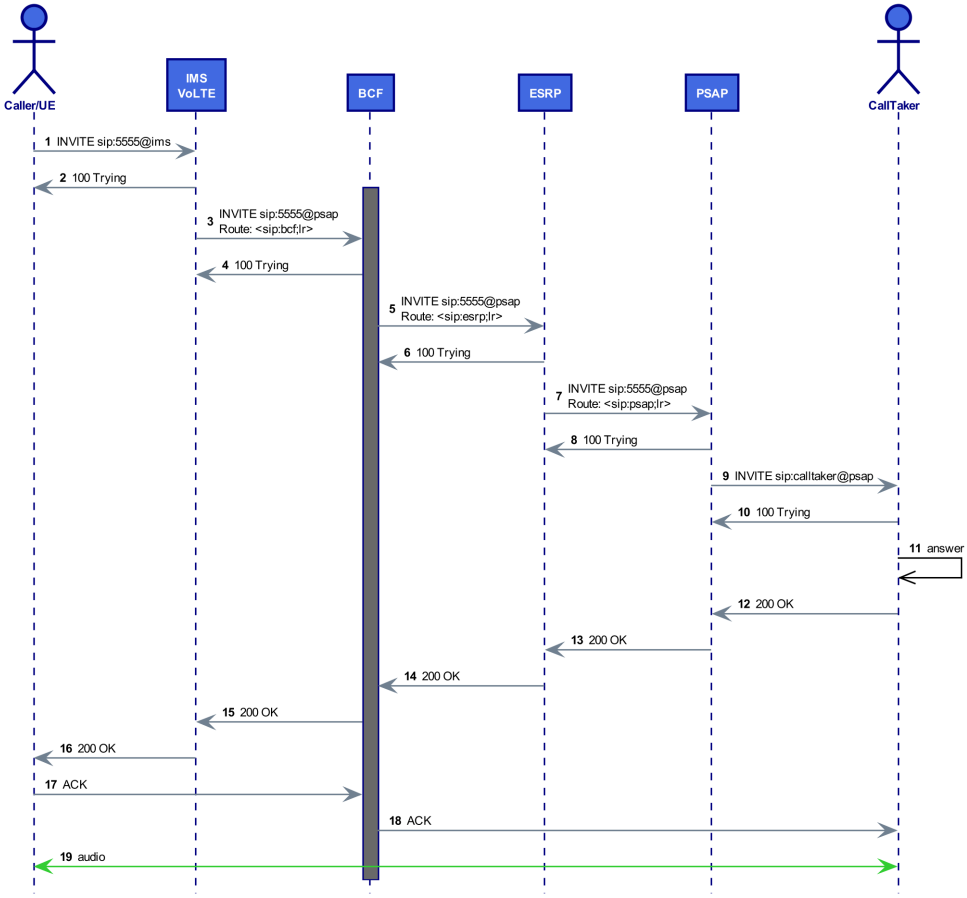

Figure 22: CN/NGCS/02 Message Sequence

Message Details

```
3 INVITE SIP Proxy --> BCF

INVITE sip:5555@bcf SIP/2.0
Via: SIP/2.0/UDP 10.1.70.21;branch=z9hG4bK7gdfgfhhrf
Via: SIP/2.0/UDP 10.1.12.70;branch=z9hG4bK776asdhds
Max-Forwards: 70
To: <sip:5555@provider>
From: Alice <sip:alice@atlanta.com>;tag=1928301774
Call-ID: a84b4c76e66710@10.1.12.70
CSeq: 314159 INVITE
Contact: <sip:alice@10.1.12.70>
Content-Type: application/sdp
...
m=audio 37500 RTP/AVP 0 8
a=rtpmap:0 PCMU/8000
a=rtpmap:8 PCMA/8000
...
```

Interoperability Test Description

Table 16: CN/NGCS/02

Interoperability Test Description			
Identifier	CN/NGCS/02		
Test Objective	Veriy connectivity between UE (VoLTE) and PSAP with emergency call including NG core services		
Configuration	- CFG_NGCS_IMS-1 (5.7)		
References	- SIP (n.13) - RTP (n.17) - URN (n.26) - LTD (n.1)		
Applicability	- UE_SIP, UE_RTP, UE_G711 (6.2) - IMS_SIP, IMS_RTP, IMS_URN (6.3) - BCF_SIP, BCF_RTP, BCF_URN, BCF_NGS (6.8) - ESRP_SIP, ESRP_URN, ESRP_NGS (6.10) - PSAP_SIP, PSAP_RTP, PSAP_G711, PSAP_URN, PSAP_NGS (6.12)		
Pre-test conditions	- IP connectivity among all elements of the specific scenario - UE configured to register with the IMS - IMS trigger points for emergency call routing (to BCF) - BCF, ESRP default trigger points for emergency call routing		
Test Sequence	**Step**	**Type**	**Description**
	1	stimulus	User dials emergency number (e.g. 112)
	2	check	Dialog creating INVITE received at BCF
	3	check	Dialog creating INVITE at default ESRP
	4	check	Dialog creating INVITE received at default PSAP
	5	check	SIP dialog established
	6	verify	Call connected
	7	verify	Use of urn:service:sos as request URI
	8	verify	Use of NG specific SIP header

7.1.4 CN/NGCS/03

This test shall verify end-to-end connectivity between UE and PSAP for emergency calls including UC access and NG core services.

Message Sequence Diagram

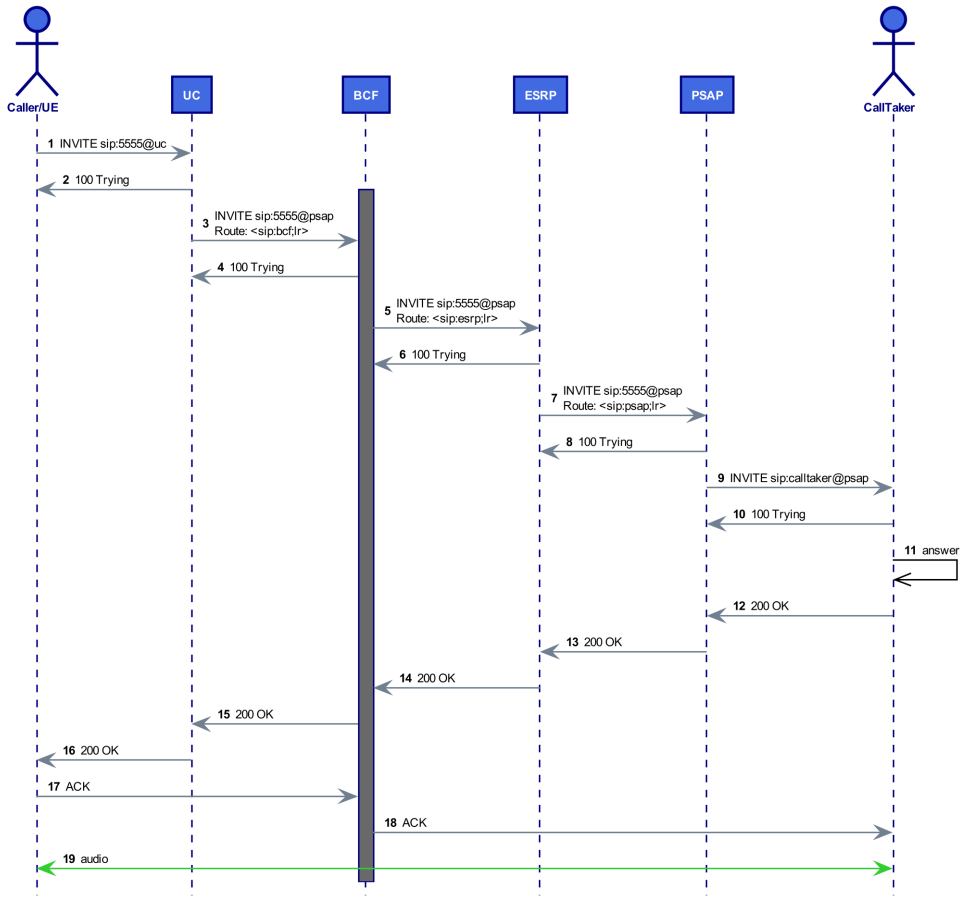

Figure 23: CN/NGCS/03 Message Sequence

Message Details

```
3 INVITE SIP Proxy --> BCF

INVITE sip:5555@bcf SIP/2.0
Via: SIP/2.0/UDP 10.1.70.21;branch=z9hG4bK7gdfgfhhrf
Via: SIP/2.0/UDP 10.1.12.70;branch=z9hG4bK776asdhds
Max-Forwards: 70
To: <sip:5555@provider>
From: Alice <sip:alice@atlanta.com>;tag=1928301774
Call-ID: a84b4c76e66710@10.1.12.70
CSeq: 314159 INVITE
Contact: <sip:alice@10.1.12.70>
Content-Type: application/sdp
...
m=audio 37500 RTP/AVP 0 8
a=rtpmap:0 PCMU/8000
a=rtpmap:8 PCMA/8000
...
```

Interoperability Test Description

Table 17: CN/NGCS/03

Interoperability Test Description			
Identifier	CN/NGCS/03		
Test Objective	Veriy connectivity between UE (UC) and PSAP with emergency call-including NG core services		
Configuration	- CFG_NGCS_UC-1 (5.8)		
References	- SIP (n.13) - RTP (n.17) - URN (n.26) - LTD (n.1)		
Applicability	- UE_SIP, UE_RTP, UE_G711 (6.2) - UC_SIP, UC_RTP, UC_G711, UC_URN (6.4) - BCF_SIP, BCF_RTP, BCF_URN, BCF_NGS (6.8) - ESRP_SIP, ESRP_URN, ESRP_NGS (6.10) - PSAP_SIP, PSAP_RTP, PSAP_G711, PSAP_URN, PSAP_NGS (6.12)		
Pre-test conditions	- IP connectivity among all elements of the specific scenario - UE configured to register with UC - UC trigger points for emergency call routing (to BCF or SIP Proxy) - BCF, ESRP, SIP Proxy default trigger points for emergency call routing		
Test Sequence	**Step**	**Type**	**Description**
	1	stimulus	User dials emergency number (e.g. 112)
	2	check	Dialog creating INVITE received at BCF
	3	check	Dialog creating INVITE at default ESRP
	4	check	Dialog creating INVITE received at default PSAP
	5	check	SIP dialog established
	6	verify	Call connected
	7	verify	Use of urn:service:sos as request URI
	8	verify	Use of NG specific SIP header

7.1.5 CN/NGCS/04

This test shall verify end-to-end connectivity between UE and PSAP for emergency calls including PSTN access and NG core services.

Message Sequence Diagram

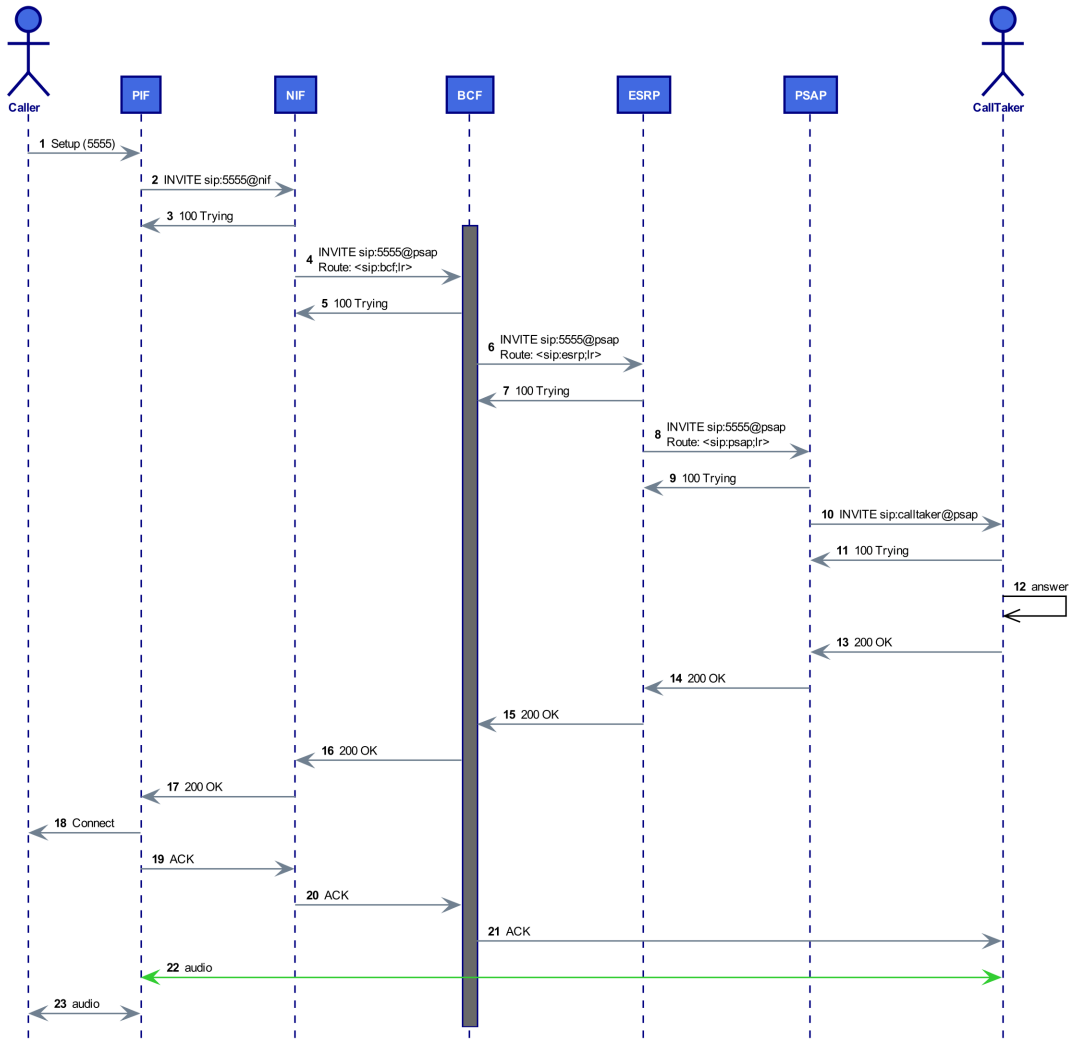

Figure 24: CN/NGCS/04 Message Sequence

Message Details

```
3 INVITE SIP Proxy --> BCF

INVITE sip:5555@bcf SIP/2.0
Via: SIP/2.0/UDP 10.1.70.21;branch=z9hG4bK7gdfgfhhrf
Via: SIP/2.0/UDP 10.1.12.70;branch=z9hG4bK776asdhds
Max-Forwards: 70
To: <sip:5555@provider>
From: Alice <sip:alice@atlanta.com>;tag=1928301774
Call-ID: a84b4c76e66710@10.1.12.70
CSeq: 314159 INVITE
Contact: <sip:alice@10.1.12.70>
Content-Type: application/sdp
...
m=audio 37500 RTP/AVP 0 8
a=rtpmap:0 PCMU/8000
a=rtpmap:8 PCMA/8000
...
```

Interoperability Test Description

Table 18: CN/NGCS/04

Interoperability Test Description			
Identifier	CN/NGCS/04		
Test Objective	Veriy connectivity between UE (PSTN) and PSAP with emergency call including NG core services		
Configuration	- CFG_NGCS_PSTN-1 (5.9)		
References	- SIP (n.13) - RTP (n.17) - URN (n.26) - LTD (n.1)		
Applicability	- UE_SIP, UE_RTP, UE_G711 (6.2) - PIF_SIP, PIF_RTP, PIF_G711 (6.5) - NIF_SIP, NIF_URN, NIF_NGS (6.6) - BCF_SIP, BCF_RTP, BCF_URN, BCF_NGS (6.8) - ESRP_SIP, ESRP_URN, ESRP_NGS (6.10) - PSAP_SIP, PSAP_RTP, PSAP_G711, PSAP_URN, PSAP_NGS (6.12)		
Pre-test conditions	- IP connectivity among all elements of the specific scenario - UE connected to PIF - PIF trigger points for emergency call routing (to NIF) - NIF trigger points for emergency call routing (to BCF) - BCF, ESRP default trigger points for emergency call routing		
Test Sequence	**Step**	**Type**	**Description**
	1	stimulus	User dials emergency number (e.g. 112)
	2	check	Dialog creating INVITE received at NIF
	3	check	Dialog creating INVITE received at BCF
	4	check	Dialog creating INVITE at default ESRP
	5	check	Dialog creating INVITE received at default PSAP
	6	check	SIP dialog established
	7	verify	Call connected
	8	verify	Use of urn:service:sos as request URI
	9	verify	Use of NG specific SIP header

7.2 Routing (RT)

7.2.1 RT/LBV/01

This test shall verify end-to-end connectivity between UE and PSAP for emergency calls including IP access, NG core services and Location By Value.

Message Sequence Diagram

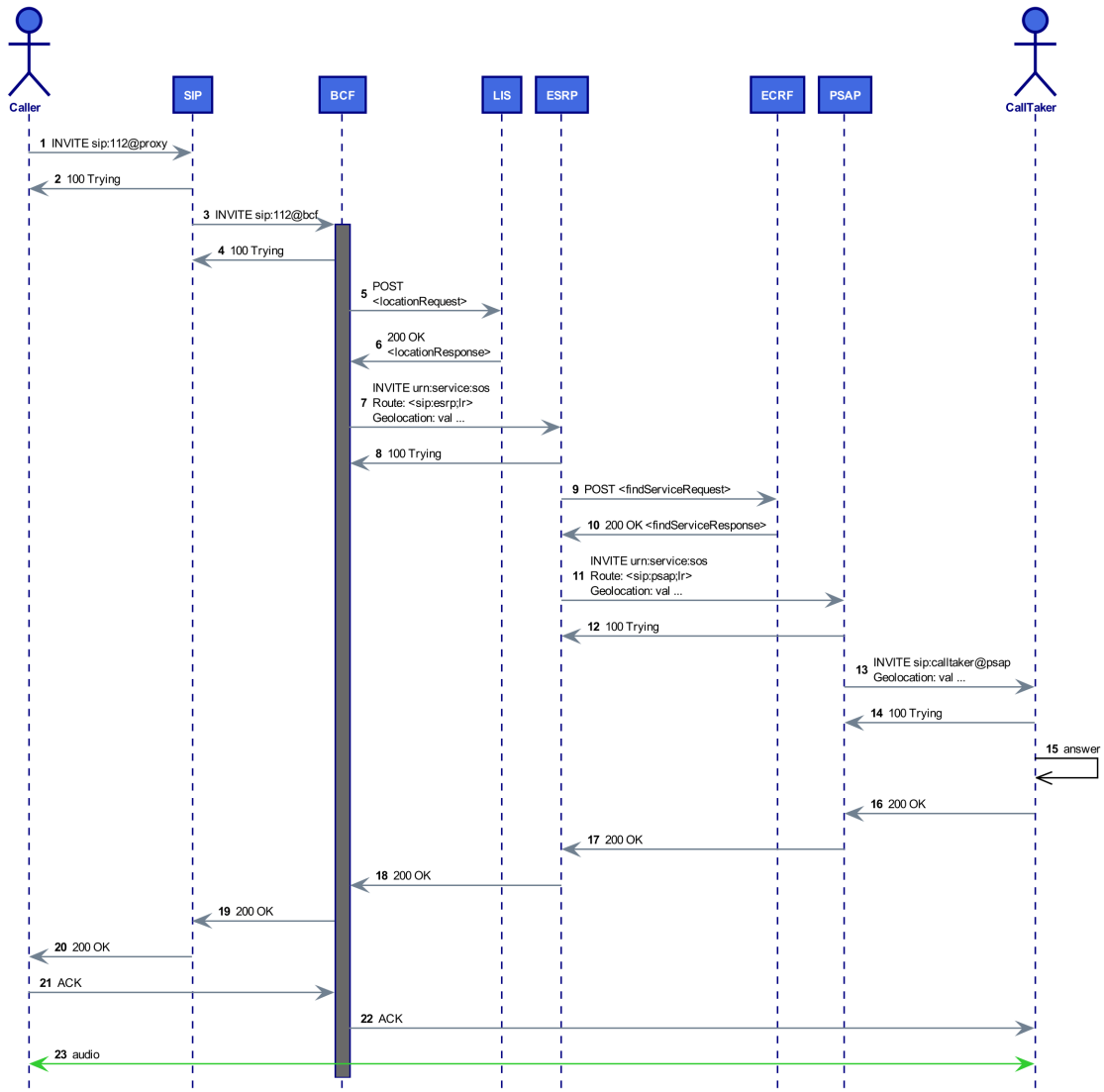

Figure 25: RT/LBV/01 Message Sequence

Message Details

```
3 INVITE SIP Proxy --> BCF

INVITE sip:112@bcf SIP/2.0
Via: SIP/2.0/UDP 10.1.70.21;branch=z9hG4bK7gdfgfhhrf
Via: SIP/2.0/UDP 10.1.12.70;branch=z9hG4bK776asdhds
Max-Forwards: 70
To: <sip:112@provider>
From: Alice <sip:alice@atlanta.com>;tag=1928301774
Call-ID: a84b4c76e66710@10.1.12.70
CSeq: 314159 INVITE
Contact: <sip:alice@10.1.12.70>
Content-Type: application/sdp
...
m=audio 37500 RTP/AVP 0 8
a=rtpmap:0 PCMU/8000
a=rtpmap:8 PCMA/8000
...

5 POST BCF --> LIS

POST / HTTP/1.1
User-Agent: BCF/7.26.0
Host: 10.1.12.90:8000
Accept: */*
Content-Type: application/held+xml;charset=utf-8
Content-Length: 196

<locationRequest xmlns="urn:ietf:params:xml:ns:geopriv:held" responseTime="8">
  <device xmlns="urn:ietf:params:xml:ns:geopriv:held:id">
    <uri>sip:alice@atlanta.com</uri>
  </device>
</locationRequest>

6 200 OK LIS --> BCF

HTTP/1.1 200 OK
Server: WOK LIS v0.1
Content-Type: application/held+xml
Content-Length: 979

<?xml version="1.0"?>
<locationResponse xmlns="urn:ietf:params:xml:ns:geopriv:held">
  <locationUriSet expires="2016-02-18T16:47:13+01:00">
    <locationURI>http://10.1.12.90:8000/xcjjwheieif</locationURI>
  </locationUriSet>
  <presence xmlns="urn:ietf:params:xml:ns:pidf" enity="sip:alice@atlanta.com">
    <tuple id="uhFz359wi">
      <status>
        <geopriv xmlns="urn:ietf:params:xml:ns:pidf:geopriv10">
          <location-info>
            <Point xmlns="http://www.opengis.net/gml" srsName="urn:ogc:crs:EPSG::4326">
              <pos>47.1234 16.0010</pos>
            </Point>
          </location-info>
          <usage-rules xmlns:gbp="urn:ietf:params:xml:ns:pidf:geopriv10:basicPolicy">
            <gbp:retention-expiry>2016-02-18T16:47:13+01:00</gbp:retention-expiry>
          </usage-rules>
          <method>manual</method>
        </geopriv>
      </status>
      <timestamp>2016-02-17T16:47:13+01:00</timestamp>
    </tuple>
  </presence>
</locationResponse>
```

Interoperability Test Description

Table 19: RT/LBV/01

Interoperability Test Description			
Identifier	RT/LBV/01		
Test Objective	Veriy connectivity between UE (IP) and PSAP with emergency call including NG core services and Location By Value		
Configuration	- CFG_NGCS_IP-1 (5.6)		
References	- SIP (n.13) - RTP (n.17) - URN (n.26) - HELD (n.10,n.33,n.35,n.40,n.42) - LoST (n.29,n.30) - LTD (n.1)		
Applicability	- UE_SIP, UE_RTP, UE_G711 (6.2) - BCF_SIP, BCF_RTP, BCF_URN, BCF_NGS, BCF_HELD, BCF_PFL (6.8) - LIS_HELD (6.9) - ESRP_SIP, ESRP_URN, ESRP_LOST, ESRP_PFL, ESRP_NGS (6.10) - ECRF_LOST, ECRF_PFL (6.11) - PSAP_SIP, PSAP_RTP, PSAP_G711, PSAP_URN, PSAP_PFL, PSAP_NGS (6.12)		
Pre-test conditions	- IP connectivity among all elements of the specific scenario - UE configured to register with SIP Proxy/Registrar - SIP Proxy trigger points for emergency call routing (to BCF) - BCF, ESRP trigger points for emergency call routing - ESRP configured to query the ECRF - ECRF configured with correct mapping		
Test Sequence	**Step**	**Type**	**Description**
	1	stimulus	User dials emergency number (e.g. 112)
	2	check	Dialog creating INVITE received at BCF
	3	check	Location object retrieved from LIS by BCF
	4	check	Dialog creating INVITE (LbyV) received at ESRP
	5	check	LoST request received at ECRF
	6	check	Dialog creating INVITE received at PSAP
	7	check	SIP dialog established
	8	verify	PIDF/LO (LbyV) received at PSAP
	9	verify	Call connected and location displayed

7.2.2 RT/LBV/02

This test shall verify end-to-end connectivity between UE and PSAP for emergency calls including IMS/VoLTE access, NG core services and Location By Value.

Message Sequence Diagram

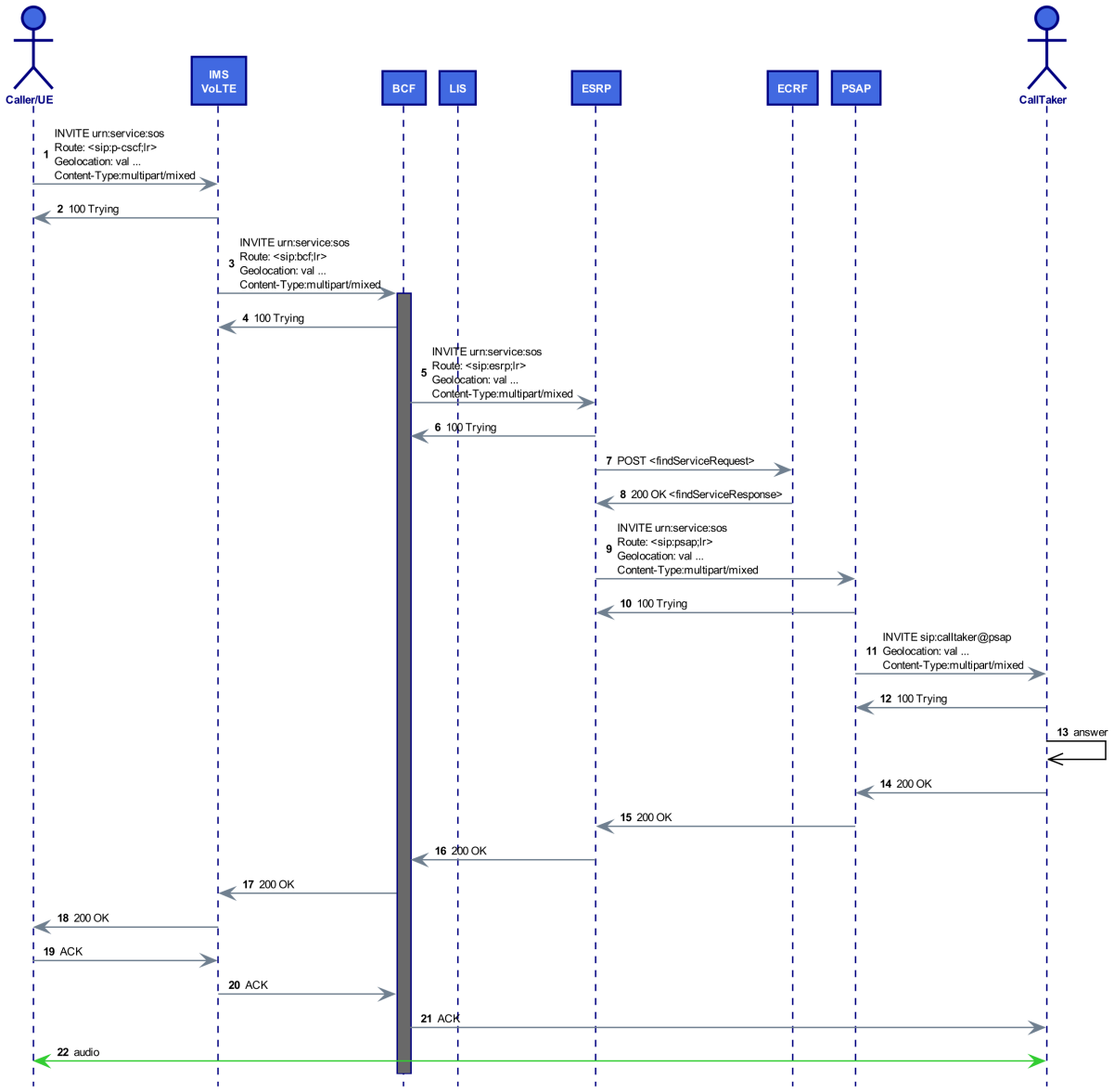

Figure 26: RT/LBV/02 Message Sequence

Message Details

```
1 INVITE Caller --> IMS

INVITE urn:service:sos SIP/2.0
Via: SIP/2.0/UDP 10.1.12.70:42592;branch=z9hG4bK846058251
From: Alice <sip:alice@atlanta.com>;tag=1632742163
To: urn:service:sos
Contact: <sip:alice@10.1.12.70:42592;transport=udp>;+g.3gpp.icsi-ref="urn%3Aurn-7%3A3gpp-service.ims.icsi.mmtel"
Call-ID: 3fb8e446f1dc88@10.1.12.70
CSeq: 1725439665 INVITE
Content-Type: multipart/mixed;boundary="d9d9dbcd8e28"
Content-Length: 2290
Max-Forwards: 70
Route: <sip:orig@scscf;lr>
Accept: application/sdp, application/pidf+xml
P-Preferred-Service: urn:urn-7:3gpp-service.ims.icsi.mmtel
Accept-Contact: *;+g.3gpp.icsi-ref="urn%3Aurn-7%3A3gpp-service.ims.icsi.mmtel"
Supported: 100rel,geolocation
Geolocation: <cid:alice@atlanta.com>
Geolocation-Routing: yes
Allow: INVITE, ACK, CANCEL, BYE, MESSAGE, OPTIONS, NOTIFY, PRACK, UPDATE, REFER
Privacy: none
P-Access-Network-Info: 3GPP-E-UTRAN-FDD;utran-cell-id-3gpp=2080172000000649
P-Preferred-Identity: <sip:alice@atlanta.com>
...

--d9d9dbcd8e28
Content-Type: application/sdp

...
m=audio 11550 RTP/AVP 8 0
a=rtpmap:0 PCMU/8000
a=rtpmap:8 PCMA/8000
...

--d9d9dbcd8e28
Content-Type: application/pidf+xml
Content-ID: alice@atlanta.com

<?xml version="1.0" encoding="utf-8"?>
<presence xmlns="urn:ietf:params:xml:ns:pidf" enity="sip:carol-01@plugtest.net">
  <tuple id="3k8a9CI">
    <status>
      <geopriv xmlns="urn:ietf:params:xml:ns:pidf:geopriv10">
        <location-info>
          <gs:Circle xmlns:gml="http://www.opengis.net/gml" xmlns:gs="http://www.opengis.net/pidflo/1.0" srsName="urn:ietf:
               params:geopriv:relative:2d">
            <gml:pos>43.62824 7.045276</gml:pos>
            <gs:radius uom="urn:ogc:def:uom:EPSG::9001">100</gs:radius>
          </gs:Circle>
        </location-info>
        <usage-rules xmlns:gbp="urn:ietf:params:xml:ns:pidf:geopriv10:basicPolicy">
          <gbp:retention-expiry>2016-02-26T10:25:27+01:00</gbp:retention-expiry>
        </usage-rules>
        <method>manual</method>
      </geopriv>
    </status>
    <timestamp>2016-02-25T10:25:27+01:00</timestamp>
  </tuple>
</presence>
--d9d9dbcd8e28--


3 INVITE IMS --> BCF

INVITE urn:service:sos SIP/2.0
Route: <sip:bcf;lr>
To: urn:service:sos
Record-Route: <sip:mo@ecscf;lr>
Record-Route: <sip:mo@pcscf;lr>
Via: SIP/2.0/UDP 10.1.70.24:7060;branch=z9hG4bK34c3bf993
Via: SIP/2.0/UDP 10.1.70.23:4060;branch=z9hG4bK34c313336
Via: SIP/2.0/UDP 10.1.12.70:42592;branch=z9hG4bK846058251
From: Alice <sip:alice@atlanta.com>;tag=1632742163
Contact: <sip:alice@10.1.12.70:42592;transport=udp>;+g.3gpp.icsi-ref="urn%3Aurn-7%3A3gpp-service.ims.icsi.mmtel"
Call-ID: 3fb8e446f1dc88@10.1.12.70
CSeq: 1725439665 INVITE
Content-Type: multipart/mixed;boundary="d9d9dbcd8e28"
Content-Length: 2290
Max-Forwards: 70
Accept: application/sdp, application/pidf+xml
P-Preferred-Service: urn:urn-7:3gpp-service.ims.icsi.mmtel
Accept-Contact: *;+g.3gpp.icsi-ref="urn%3Aurn-7%3A3gpp-service.ims.icsi.mmtel"
Supported: 100rel,geolocation
Geolocation: <cid:alice@atlanta.com>
Geolocation-Routing: yes
Allow: INVITE, ACK, CANCEL, BYE, MESSAGE, OPTIONS, NOTIFY, PRACK, UPDATE, REFER
Privacy: none
P-Access-Network-Info: 3GPP-E-UTRAN-FDD;utran-cell-id-3gpp=2080172000000649
P-Asserted-Identity: <sip:alice@atlanta.com>
```

```
...

--d9d9dbcd8e28
Content-Type: application/sdp

...
m=audio 11550 RTP/AVP 8 0
a=rtpmap:0 PCMU/8000
a=rtpmap:8 PCMA/8000
...

--d9d9dbcd8e28
Content-Type: application/pidf+xml
Content-ID: alice@atlanta.com

<?xml version="1.0" encoding="utf-8"?>
<presence xmlns="urn:ietf:params:xml:ns:pidf" enity="sip:alice@atlanta.com">
  <tuple id="sg89ae">
    <status>
      <geopriv xmlns="urn:ietf:params:xml:ns:pidf:geopriv10">
        <location-info>
          <Point xmlns="http://www.opengis.net/gml" srsName="urn:ogc:crs:EPSG::4326">
            <pos>47.1234 16.0010</pos>
          </Point>
        </location-info>
        <usage-rules xmlns:gbp="urn:ietf:params:xml:ns:pidf:geopriv10:basicPolicy">
          <gbp:retention-expiry>2016-02-18T16:47:13+01:00</gbp:retention-expiry>
        </usage-rules>
        <method>manual</method>
      </geopriv>
    </status>
    <timestamp>2016-02-17T16:47:13+01:00</timestamp>
  </tuple>
</presence>
--d9d9dbcd8e28--


5 INVITE BCF --> ESRP

INVITE urn:service:sos SIP/2.0
Route: <sip:esrp;lr>
To: urn:service:sos
Via: SIP/2.0/UDP 10.1.70.25;branch=z9hG4bK34c3bf123
From: Alice <sip:alice@atlanta.com>;tag=1632742163
Contact: <sip:alice@10.1.12.70:42592;transport=udp>;+g.3gpp.icsi-ref="urn%3Aurn-7%3A3gpp-service.ims.icsi.mmtel"
Call-ID: 3fb8e446f1dc88@10.1.12.70
CSeq: 1725439665 INVITE
Content-Type: multipart/mixed;boundary="d9d9dbcd8e28"
Content-Length: 2290
Max-Forwards: 70
Accept: application/sdp, application/pidf+xml
Supported: 100rel,geolocation
Geolocation: <cid:alice@atlanta.com>
Geolocation-Routing: yes
Allow: INVITE, ACK, CANCEL, BYE, MESSAGE, OPTIONS, NOTIFY, PRACK, UPDATE, REFER
Privacy: none
P-Asserted-Identity: <sip:alice@atlanta.com>
...

--d9d9dbcd8e28
Content-Type: application/sdp

...
m=audio 11550 RTP/AVP 8 0
a=rtpmap:0 PCMU/8000
a=rtpmap:8 PCMA/8000
...

--d9d9dbcd8e28
Content-Type: application/pidf+xml
Content-ID: alice@atlanta.com

<?xml version="1.0" encoding="utf-8"?>
<presence xmlns="urn:ietf:params:xml:ns:pidf" enity="sip:alice@atlanta.com">
  <tuple id="sg89ae">
    <status>
      <geopriv xmlns="urn:ietf:params:xml:ns:pidf:geopriv10">
        <location-info>
          <Point xmlns="http://www.opengis.net/gml" srsName="urn:ogc:crs:EPSG::4326">
            <pos>47.1234 16.0010</pos>
          </Point>
        </location-info>
        <usage-rules xmlns:gbp="urn:ietf:params:xml:ns:pidf:geopriv10:basicPolicy">
          <gbp:retention-expiry>2016-02-18T16:47:13+01:00</gbp:retention-expiry>
        </usage-rules>
        <method>manual</method>
      </geopriv>
    </status>
    <timestamp>2016-02-17T16:47:13+01:00</timestamp>
  </tuple>
</presence>
--d9d9dbcd8e28--
```

Interoperability Test Description

Table 20: RT/LBV/02

Interoperability Test Description			
Identifier	RT/LBV/02		
Test Objective	Veriy connectivity between UE (VoLTE) and PSAP with emergency call including NG core services and Location By Value		
Configuration	- CFG_NGCS_IMS-1 (5.7)		
References	- SIP (n.13) - RTP (n.17) - URN (n.26) - HELD (n.10,n.33,n.35,n.40,n.42) - LoST (n.29,n.30) - LTD (n.1)		
Applicability	- UE_SIP, UE_RTP, UE_G711, UE_URN, UE_PFL (6.2) - IMS_SIP, IMS_RTP, IMS_URN, IMS_PFL (6.3) - BCF_SIP, BCF_RTP, BCF_URN, BCF_NGS, BCF_PFL (6.8) - ESRP_SIP, ESRP_URN, ESRP_LOST, ESRP_PFL, ESRP_NGS (6.10) - ECRF_LOST, ECRF_PFL (6.11) - PSAP_SIP, PSAP_RTP, PSAP_G711, PSAP_URN, PSAP_PFL, PSAP_NGS (6.12)		
Pre-test conditions	- IP connectivity among all elements of the specific scenario - UE configured to register with the IMS domain - UE GPS feature enabled - IMS trigger points for emergency call routing (to BCF) - BCF, ESRP trigger points for emergency call routing - ESRP configured to query the ECRF - ECRF configured with correct mapping		
Test Sequence	**Step**	**Type**	**Description**
	1	stimulus	User dials emergency number
	2	check	Dialog creating INVITE received at IMS domain
	3	check	Dialog creating INVITE and LbyV received at BCF
	4	check	Dialog creating INVITE and LbyV received at ESRP
	5	check	LoST request received at ECRF
	6	check	Dialog creating INVITE received at PSAP
	7	check	SIP dialog established
	8	verify	PIDF/LO (LbyV) received at PSAP
	9	verify	Call connected and location displayed

7.2.3 RT/LBV/03

This test shall verify end-to-end connectivity between UE and PSAP for emergency calls including UC, NG core services and Location By Value.

Message Sequence Diagram

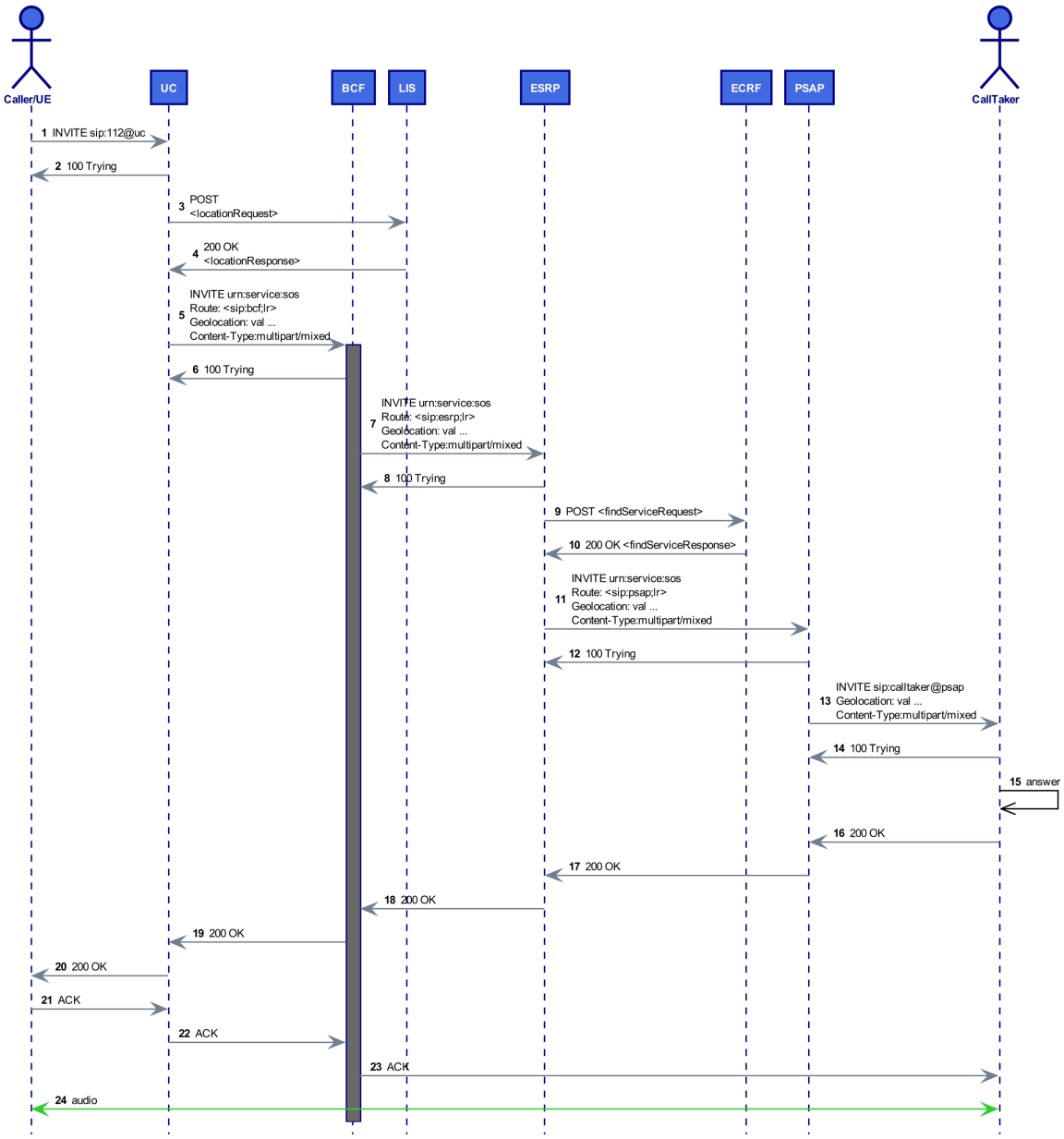

Figure 27: RT/LBV/03 Message Sequence

Message Details

```
3 INVITE SIP Proxy --> BCF

INVITE sip:112@bcf SIP/2.0
Via: SIP/2.0/UDP 10.1.70.21;branch=z9hG4bK7gdfgfhhrf
Via: SIP/2.0/UDP 10.1.12.70;branch=z9hG4bK776asdhds
Max-Forwards: 70
To: <sip:112@provider>
From: Alice <sip:alice@atlanta.com>;tag=1928301774
Call-ID: a84b4c76e66710@10.1.12.70
CSeq: 314159 INVITE
Contact: <sip:alice@10.1.12.70>
Content-Type: application/sdp
...
m=audio 37500 RTP/AVP 0 8
a=rtpmap:0 PCMU/8000
a=rtpmap:8 PCMA/8000
...

5 POST BCF --> LIS

POST / HTTP/1.1
User-Agent: BCF/7.26.0
Host: 10.1.12.90:8000
Accept: */*
Content-Type: application/held+xml;charset=utf-8
Content-Length: 196

<locationRequest xmlns="urn:ietf:params:xml:ns:geopriv:held" responseTime="8">
  <device xmlns="urn:ietf:params:xml:ns:geopriv:held:id">
    <uri>sip:alice@atlanta.com</uri>
  </device>
</locationRequest>

6 200 OK LIS --> BCF

HTTP/1.1 200 OK
Server: WOK LIS v0.1
Content-Type: application/held+xml
Content-Length: 979

<?xml version="1.0"?>
<locationResponse xmlns="urn:ietf:params:xml:ns:geopriv:held">
  <locationUriSet expires="2016-02-18T16:47:13+01:00">
    <locationURI>http://10.1.12.90:8000/xcjjwheieif</locationURI>
  </locationUriSet>
  <presence xmlns="urn:ietf:params:xml:ns:pidf" enity="sip:alice@atlanta.com">
    <tuple id="uhFz359wi">
      <status>
        <geopriv xmlns="urn:ietf:params:xml:ns:pidf:geopriv10">
          <location-info>
            <Point xmlns="http://www.opengis.net/gml" srsName="urn:ogc:crs:EPSG::4326">
              <pos>47.1234 16.0010</pos>
            </Point>
          </location-info>
          <usage-rules xmlns:gbp="urn:ietf:params:xml:ns:pidf:geopriv10:basicPolicy">
            <gbp:retention-expiry>2016-02-18T16:47:13+01:00</gbp:retention-expiry>
          </usage-rules>
          <method>manual</method>
        </geopriv>
      </status>
      <timestamp>2016-02-17T16:47:13+01:00</timestamp>
    </tuple>
  </presence>
</locationResponse>
```

Interoperability Test Description

Table 21: RT/LBV/03

Interoperability Test Description			
Identifier	RT/LBV/03		
Test Objective	Veriy connectivity between UE (UC) and PSAP with emergency call including NG core services and Location By Value		
Configuration	- CFG_NGCS_UC-1 (5.8)		
References	- SIP (n.13) - RTP (n.17) - URN (n.26) - HELD (n.10,n.33,n.35,n.40,n.42) - LoST (n.29,n.30) - LTD (n.1)		
Applicability	- UE_SIP, UE_RTP, UE_G711, UE_URN, UE_PFL (6.2) - UC_SIP, UC_RTP, UC_G711, UC_URN, UC_PFL (6.4) - BCF_SIP, BCF_RTP, BCF_URN, BCF_NGS, BCF_PFL (6.8) - ESRP_SIP, ESRP_URN, ESRP_LOST, ESRP_PFL, ESRP_NGS (6.10) - ECRF_LOST, ECRF_PFL (6.11) - PSAP_SIP, PSAP_RTP, PSAP_G711, PSAP_URN, PSAP_PFL, PSAP_NGS (6.12)		
Pre-test conditions	- IP connectivity among all elements of the specific scenario - UE configured to register with UC - UC trigger points for emergency call routing (to BCF) - BCF, ESRP trigger points for emergency call routing - ESRP configured to query the ECRF - ECRF configured with correct mapping		
Test Sequence	**Step**	**Type**	**Description**
	1	stimulus	User dials emergency number (e.g. 112)
	2	check	Dialog creating INVITE received at UC domain
	3	check	Dialog creating INVITE and LbyV received at BCF
	4	check	Dialog creating INVITE and LbyV received at ESRP
	5	check	LoST request received at ECRF
	6	check	Dialog creating INVITE received at PSAP
	7	check	SIP dialog established
	8	verify	PIDF/LO (LbyV) received at PSAP
	9	verify	Call connected and location displayed

7.2.4 RT/LBV/04

This test shall verify end-to-end connectivity between UE and PSAP for emergency calls including PIF, NIF, NG core services and Location By Value.

Message Sequence Diagram

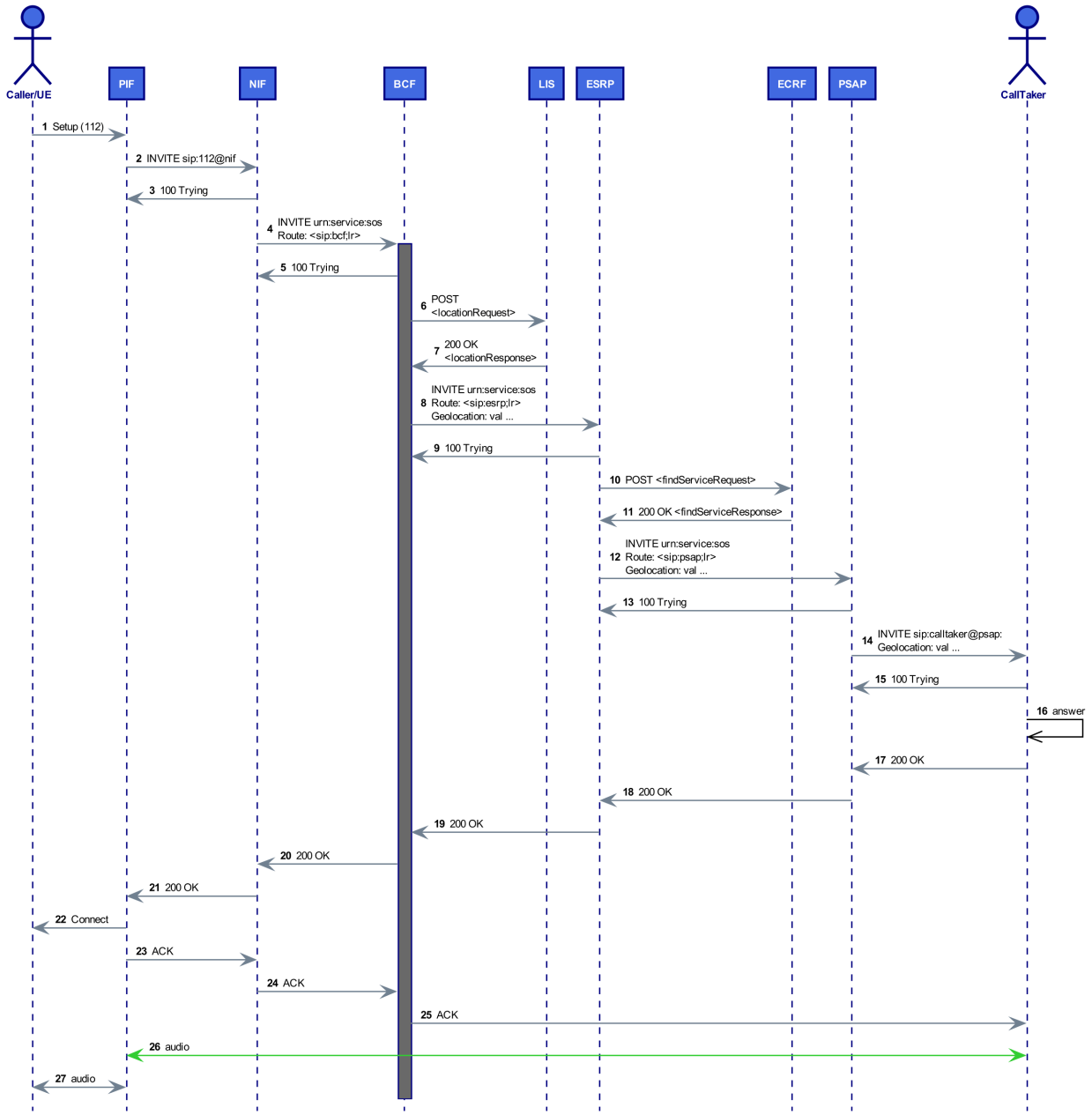

Figure 28: RT/LBV/04 Message Sequence

Message Details

```
3 INVITE SIP Proxy --> BCF

INVITE sip:112@bcf SIP/2.0
Via: SIP/2.0/UDP 10.1.70.21;branch=z9hG4bK7gdfgfhhrf
Via: SIP/2.0/UDP 10.1.12.70;branch=z9hG4bK776asdhds
Max-Forwards: 70
To: <sip:112@provider>
From: Alice <sip:alice@atlanta.com>;tag=1928301774
Call-ID: a84b4c76e66710@10.1.12.70
CSeq: 314159 INVITE
Contact: <sip:alice@10.1.12.70>
Content-Type: application/sdp
...
m=audio 37500 RTP/AVP 0 8
a=rtpmap:0 PCMU/8000
a=rtpmap:8 PCMA/8000
...

5 POST BCF --> LIS

POST / HTTP/1.1
User-Agent: BCF/7.26.0
Host: 10.1.12.90:8000
Accept: */*
Content-Type: application/held+xml;charset=utf-8
Content-Length: 196

<locationRequest xmlns="urn:ietf:params:xml:ns:geopriv:held" responseTime="8">
  <device xmlns="urn:ietf:params:xml:ns:geopriv:held:id">
    <uri>sip:alice@atlanta.com</uri>
  </device>
</locationRequest>

6 200 OK LIS --> BCF

HTTP/1.1 200 OK
Server: WOK LIS v0.1
Content-Type: application/held+xml
Content-Length: 979

<?xml version="1.0"?>
<locationResponse xmlns="urn:ietf:params:xml:ns:geopriv:held">
  <locationUriSet expires="2016-02-18T16:47:13+01:00">
    <locationURI>http://10.1.12.90:8000/xcjjwheieif</locationURI>
  </locationUriSet>
  <presence xmlns="urn:ietf:params:xml:ns:pidf" enity="sip:alice@atlanta.com">
    <tuple id="uhFz359wi">
      <status>
        <geopriv xmlns="urn:ietf:params:xml:ns:pidf:geopriv10">
          <location-info>
            <Point xmlns="http://www.opengis.net/gml" srsName="urn:ogc:crs:EPSG::4326">
              <pos>47.1234 16.0010</pos>
            </Point>
          </location-info>
          <usage-rules xmlns:gbp="urn:ietf:params:xml:ns:pidf:geopriv10:basicPolicy">
            <gbp:retention-expiry>2016-02-18T16:47:13+01:00</gbp:retention-expiry>
          </usage-rules>
          <method>manual</method>
        </geopriv>
      </status>
      <timestamp>2016-02-17T16:47:13+01:00</timestamp>
    </tuple>
  </presence>
</locationResponse>
```

Interoperability Test Description

Table 22: RT/LBV/04

Interoperability Test Description			
Identifier	RT/LBV/04		
Test Objective	Veriy connectivity between UE (UC) and PSAP with emergency call including NG core services and Location By Value		
Configuration	- CFG_NGCS_PSTN-1 (5.9)		
References	- SIP (n.13) - RTP (n.17) - URN (n.26) - HELD (n.10,n.33,n.35,n.40,n.42) - LoST (n.29,n.30) - LTD (n.1)		
Applicability	- UE_SIP, UE_RTP, UE_G711, UE_URN, UE_PFL (6.2) - PIF_SIP, PIF_RTP, PIF_G711 (6.5) - NIF_SIP, NIF_URN, NIF_NGS (6.6) - BCF_SIP, BCF_RTP, BCF_URN, BCF_NGS, BCF_PFL (6.8) - ESRP_SIP, ESRP_URN, ESRP_LOST, ESRP_PFL, ESRP_NGS (6.10) - ECRF_LOST, ECRF_PFL (6.11) - PSAP_SIP, PSAP_RTP, PSAP_G711, PSAP_URN, PSAP_PFL, PSAP_NGS (6.12)		
Pre-test conditions	- IP connectivity among all elements of the specific scenario - UE connected to PIF - PIF trigger points for emergency call routing (to NIF) - NIF trigger points for emergency call routing (to BCF) - BCF, ESRP trigger points for emergency call routing - ESRP configured to query the ECRF - ECRF configured with correct mapping		
Test Sequence	**Step**	**Type**	**Description**
	1	stimulus	User dials emergency number (e.g. 112)
	2	check	Dialog creating INVITE received at NIF
	3	check	Dialog creating INVITE received at BCF
	4	check	Location object retrieved from LIS by BCF
	5	check	Dialog creating INVITE (LbyV) received at ESRP
	6	check	LoST request received at ECRF
	7	check	Dialog creating INVITE received at PSAP
	8	check	SIP dialog established
	9	verify	PIDF/LO (LbyV) received at PSAP
	10	verify	Call connected and location displayed

7.2.5 RT/LBR/01

This test shall verify end-to-end connectivity between UE and PSAP for emergency calls including IP access, NG core services and Location By Reference.

Message Sequence Diagram

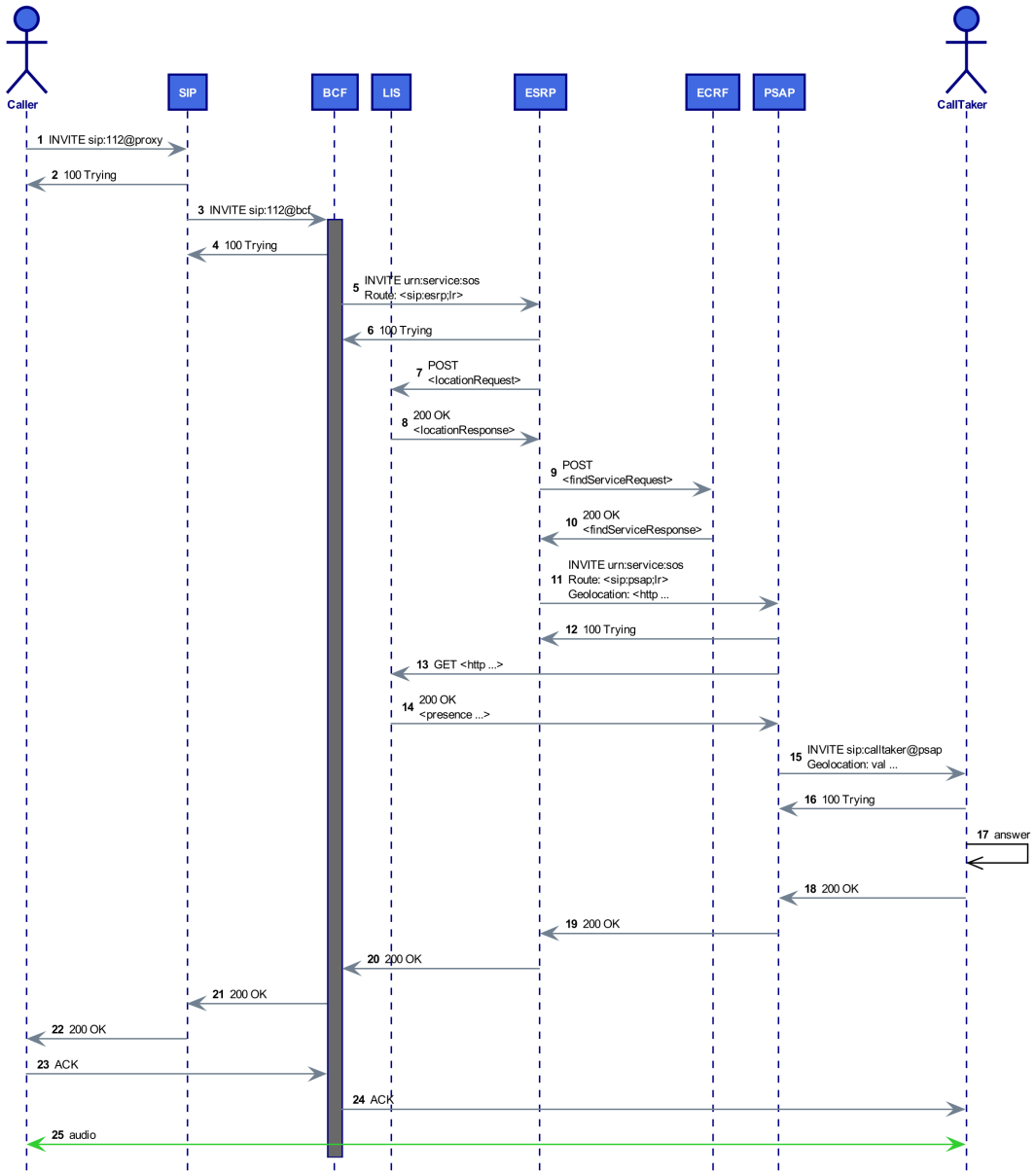

Figure 29: RT/LBR/01 Message Sequence

Message Details

```
3 INVITE SIP Proxy --> BCF

INVITE sip:112@bcf SIP/2.0
Via: SIP/2.0/UDP 10.1.70.21;branch=z9hG4bK7gdfgfhhrf
Via: SIP/2.0/UDP 10.1.12.70;branch=z9hG4bK776asdhds
Max-Forwards: 70
To: <sip:112@provider>
From: Alice <sip:alice@atlanta.com>;tag=1928301774
Call-ID: a84b4c76e66710@10.1.12.70
CSeq: 314159 INVITE
Contact: <sip:alice@10.1.12.70>
Content-Type: application/sdp
...
m=audio 37500 RTP/AVP 0 8
a=rtpmap:0 PCMU/8000
a=rtpmap:8 PCMA/8000
...

7 POST ESRP --> LIS

POST / HTTP/1.1
User-Agent: esrp/2.6.0
Host: 10.1.12.90:8000
Accept: */*
Content-Type: application/held+xml;charset=utf-8
Content-Length: 196

<locationRequest xmlns="urn:ietf:params:xml:ns:geopriv:held" responseTime="8">
  <device xmlns="urn:ietf:params:xml:ns:geopriv:held:id">
    <uri>sip:alice@atlanta.com</uri>
  </device>
</locationRequest>

8 200 OK LIS --> ESRP

HTTP/1.1 200 OK
Server: WOK LIS v0.1
Content-Type: application/held+xml
Content-Length: 979

<?xml version="1.0"?>
<locationResponse xmlns="urn:ietf:params:xml:ns:geopriv:held">
  <locationUriSet expires="2016-02-18T16:47:13+01:00">
    <locationURI>http://10.1.12.90:8000/xcjjwheieif</locationURI>
  </locationUriSet>
  <presence xmlns="urn:ietf:params:xml:ns:pidf" enity="sip:alice@atlanta.com">
    <tuple id="uh12Fwi4">
      <status>
        <geopriv xmlns="urn:ietf:params:xml:ns:pidf:geopriv10">
          <location-info>
            <Point xmlns="http://www.opengis.net/gml" srsName="urn:ogc:crs:EPSG::4326">
              <pos>47.1234 16.0010</pos>
            </Point>
          </location-info>
          <usage-rules xmlns:gbp="urn:ietf:params:xml:ns:pidf:geopriv10:basicPolicy">
            <gbp:retention-expiry>2016-02-18T16:47:13+01:00</gbp:retention-expiry>
          </usage-rules>
          <method>manual</method>
        </geopriv>
      </status>
      <timestamp>2016-02-17T16:47:13+01:00</timestamp>
    </tuple>
  </presence>
</locationResponse>

11 INVITE ESRP --> PSAP

INVITE urn:service.sos SIP/2.0
Via: SIP/2.0/TCP 10.1.21.31;branch=z9hG4bK776asdhds2
Via: SIP/2.0/UDP 10.1.70.21;branch=z9hG4bK7gdfgfhhrf
Via: SIP/2.0/UDP 10.1.12.70;branch=z9hG4bK776asdhds
Route: <sip:psap;lr>
Max-Forwards: 70
To: <sip:112@provider>
From: Alice <sip:alice@atlanta.com>;tag=1928301774
Call-ID: a84b4c76e66710@10.1.12.70
CSeq: 314159 INVITE
Supported: geolocation
Geolocation: <http://10.1.12.90:8000/xcjjwheieif>
Contact: <sip:alice@10.1.12.70>
Call-Info: <urn:eena:callid:a56e556d871.bcf> ;purpose=eena-CallId
Call-Info: <urn:eena:incidentid:a56e556d871> ;purpose=eena-IncidentId
Content-Type: application/sdp
...
m=audio 37500 RTP/AVP 0 8
a=rtpmap:0 PCMU/8000
a=rtpmap:8 PCMA/8000
...
```

```
13 GET PSAP --> LIS

GET /xcjjwheieif HTTP/1.1
User-Agent: psap/2.1.0
Host: 10.1.12.90:8000
Accept: */*

14 200 OK LIS --> PSAP

HTTP/1.1 200 OK
Server: WOK LIS v0.1
Content-Type: application/pidf+xml
Content-Length: 714

<presence xmlns="urn:ietf:params:xml:ns:pidf" enity="sip:alice@atlanta.com">
  <tuple id="uh12Fwi4">
    <status>
      <geopriv xmlns="urn:ietf:params:xml:ns:pidf:geopriv10">
        <location-info>
          <Point xmlns="http://www.opengis.net/gml" srsName="urn:ogc:crs:EPSG::4326">
            <pos>47.1234 16.0010</pos>
          </Point>
        </location-info>
        <usage-rules xmlns:gbp="urn:ietf:params:xml:ns:pidf:geopriv10:basicPolicy">
          <gbp:retention-expiry>2016-02-18T16:47:13+01:00</gbp:retention-expiry>
        </usage-rules>
        <method>manual</method>
      </geopriv>
    </status>
    <timestamp>2016-02-17T16:47:13+01:00</timestamp>
  </tuple>
</presence>
```

Interoperability Test Description

Table 23: RT/LBR/01

Interoperability Test Description			
Identifier	RT/LBR/01		
Test Objective	Veriy connectivity between UE (IP) and PSAP with emergency call including NG core services and Location By Reference		
Configuration	- CFG_NGCS_IP-1 (5.6)		
References	- SIP (n.13) - RTP (n.17) - URN (n.26) - HELD (n.10,n.33,n.35,n.40,n.42) - LoST (n.29,n.30) - LTD (n.1)		
Applicability	- UE_SIP, UE_RTP, UE_G711 (6.2) - BCF_SIP, BCF_RTP, BCF_URN, BCF_NGS (6.8) - LIS_HELD (6.9) - ESRP_SIP, ESRP_URN, ESRP_LOST, ESRP_HELD, ESRP_PFL, ESRP_NGS (6.10) - ECRF_LOST, ECRF_PFL (6.11) - PSAP_SIP, PSAP_RTP, PSAP_G711, PSAP_URN, PSAP_HELD, PSAP_PFL, PSAP_NGS (6.12)		
Pre-test conditions	- IP connectivity among all elements of the specific scenario - UE configured to register with SIP Proxy/Registrar - UE location manually set (device id: uri) - SIP Proxy trigger points for emergency call routing (to BCF) - BCF, ESRP trigger points for emergency call routing - ESRP configured to query the ECRF - ECRF configured with correct mapping		
Test Sequence	**Step**	**Type**	**Description**
	1	stimulus	User dials emergency number (e.g. 112)
	2	check	Dialog creating INVITE received at BCF
	3	check	Dialog creating INVITE received at ESRP
	4	check	Location URI retrieved from LIS by ESRP
	5	check	LoST request received at ECRF
	6	check	Dialog creating INVITE (LbyR) received at PSAP
	7	check	SIP dialog established
	8	verify	PIDF/LO dereferenced by PSAP
	9	verify	Call connected and location displayed

7.2.6 RT/LBR/02

This test shall verify end-to-end connectivity between UE and PSAP for emergency calls including IMS/VoLTE access, NG core services and Location By Reference.

Message Sequence Diagram

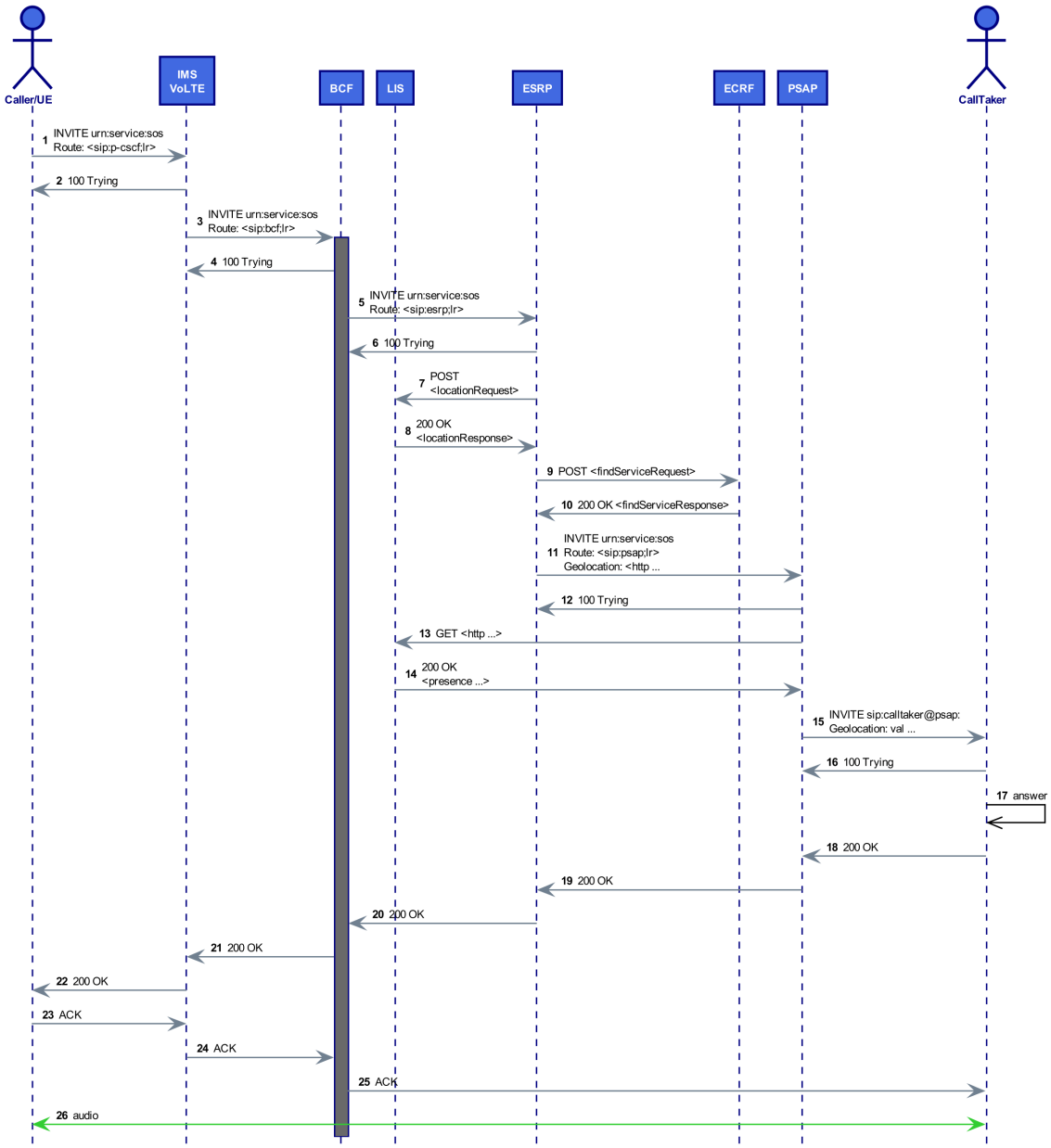

Figure 30: RT/LBR/02 Message Sequence

Message Details

```
3 INVITE SIP Proxy --> BCF

INVITE sip:112@bcf SIP/2.0
Via: SIP/2.0/UDP 10.1.70.21;branch=z9hG4bK7gdfgfhhrf
Via: SIP/2.0/UDP 10.1.12.70;branch=z9hG4bK776asdhds
Max-Forwards: 70
To: <sip:112@provider>
From: Alice <sip:alice@atlanta.com>;tag=1928301774
Call-ID: a84b4c76e66710@10.1.12.70
CSeq: 314159 INVITE
Contact: <sip:alice@10.1.12.70>
Content-Type: application/sdp
...
m=audio 37500 RTP/AVP 0 8
a=rtpmap:0 PCMU/8000
a=rtpmap:8 PCMA/8000
...

7 POST ESRP --> LIS

POST / HTTP/1.1
User-Agent: esrp/2.6.0
Host: 10.1.12.90:8000
Accept: */*
Content-Type: application/held+xml;charset=utf-8
Content-Length: 196

<locationRequest xmlns="urn:ietf:params:xml:ns:geopriv:held" responseTime="8">
  <device xmlns="urn:ietf:params:xml:ns:geopriv:held:id">
    <uri>sip:alice@atlanta.com</uri>
  </device>
</locationRequest>

8 200 OK LIS --> ESRP

HTTP/1.1 200 OK
Server: WOK LIS v0.1
Content-Type: application/held+xml
Content-Length: 983

<?xml version="1.0"?>
<locationResponse xmlns="urn:ietf:params:xml:ns:geopriv:held">
  <locationUriSet expires="2016-02-18T16:47:13+01:00">
    <locationURI>http://10.1.12.90:8000/xcjjwheieif</locationURI>
  </locationUriSet>
  <presence xmlns="urn:ietf:params:xml:ns:pidf" enity="sip:alice@atlanta.com">
    <tuple id="uh12Fwi4">
      <status>
        <geopriv xmlns="urn:ietf:params:xml:ns:pidf:geopriv10">
          <location-info>
            <Point xmlns="http://www.opengis.net/gml" srsName="urn:ogc:def:crs:EPSG::4326">
              <pos>47.1234 16.0010</pos>
            </Point>
          </location-info>
          <usage-rules xmlns:gbp="urn:ietf:params:xml:ns:pidf:geopriv10:basicPolicy">
            <gbp:retention-expiry>2016-02-18T16:47:13+01:00</gbp:retention-expiry>
          </usage-rules>
          <method>manual</method>
        </geopriv>
      </status>
      <timestamp>2016-02-17T16:47:13+01:00</timestamp>
    </tuple>
  </presence>
</locationResponse>

11 INVITE ESRP --> PSAP

INVITE urn:service.sos SIP/2.0
Via: SIP/2.0/TCP 10.1.21.31;branch=z9hG4bK776asdhds2
Via: SIP/2.0/UDP 10.1.70.21;branch=z9hG4bK7gdfgfhhrf
Via: SIP/2.0/UDP 10.1.12.70;branch=z9hG4bK776asdhds
Route: <sip:psap;lr>
Max-Forwards: 70
To: <sip:112@provider>
From: Alice <sip:alice@atlanta.com>;tag=1928301774
Call-ID: a84b4c76e66710@10.1.12.70
CSeq: 314159 INVITE
Supported: geolocation
Geolocation: <http://10.1.12.90:8000/xcjjwheieif>
Contact: <sip:alice@10.1.12.70>
Call-Info: <urn:eena:callid:a56e556d871.bcf> ;purpose=eena-CallId
Call-Info: <urn:eena:incidentid:a56e556d871> ;purpose=eena-IncidentId
Content-Type: application/sdp
...
m=audio 37500 RTP/AVP 0 8
a=rtpmap:0 PCMU/8000
a=rtpmap:8 PCMA/8000
...
```

```
13 GET PSAP --> LIS

GET /xcjjwheieif HTTP/1.1
User-Agent: psap/2.1.0
Host: 10.1.12.90:8000
Accept: */*

14 200 OK LIS --> PSAP

HTTP/1.1 200 OK
Server: WOK LIS v0.1
Content-Type: application/pidf+xml
Content-Length: 714

<presence xmlns="urn:ietf:params:xml:ns:pidf" enity="sip:alice@atlanta.com">
  <tuple id="uh12Fwi4">
    <status>
      <geopriv xmlns="urn:ietf:params:xml:ns:pidf:geopriv10">
        <location-info>
          <Point xmlns="http://www.opengis.net/gml" srsName="urn:ogc:crs:EPSG::4326">
            <pos>47.1234 16.0010</pos>
          </Point>
        </location-info>
        <usage-rules xmlns:gbp="urn:ietf:params:xml:ns:pidf:geopriv10:basicPolicy">
          <gbp:retention-expiry>2016-02-18T16:47:13+01:00</gbp:retention-expiry>
        </usage-rules>
        <method>manual</method>
      </geopriv>
    </status>
    <timestamp>2016-02-17T16:47:13+01:00</timestamp>
  </tuple>
</presence>
```

Interoperability Test Description

Table 24: RT/LBR/02

Interoperability Test Description			
Identifier	RT/LBR/02		
Test Objective	Veriy connectivity between UE (VoLTE) and PSAP with emergency call including NG core services and Location By Reference		
Configuration	- CFG_NGCS_IMS-1 (5.7)		
References	- SIP (n.13) - RTP (n.17) - URN (n.26) - HELD (n.10,n.33,n.35,n.40,n.42) - LoST (n.29,n.30) - LTD (n.1)		
Applicability	- UE_SIP, UE_RTP, UE_G711 (6.2) - IMS_SIP, IMS_RTP, IMS_URN, IMS_PFL (6.3) - BCF_SIP, BCF_RTP, BCF_URN, BCF_NGS (6.8) - LIS_HELD (6.9) - ESRP_SIP, ESRP_URN, ESRP_LOST, ESRP_HELD, ESRP_PFL, ESRP_NGS (6.10) - ECRF_LOST, ECRF_PFL (6.11) - PSAP_SIP, PSAP_RTP, PSAP_G711, PSAP_URN, PSAP_HELD, PSAP_PFL, PSAP_NGS (6.12)		
Pre-test conditions	- IP connectivity among all elements of the specific scenario - UE configured to register with the IMS domain - UE location manually set (device id: uri) - IMS trigger points for emergency call routing (to BCF) - BCF, ESRP trigger points for emergency call routing - ESRP configured to query the ECRF - ECRF configured with correct mapping		
Test Sequence	**Step**	**Type**	**Description**
	1	stimulus	User dials emergency number
	2	check	Dialog creating INVITE received at IMS domain
	3	check	Dialog creating INVITE received at BCF
	4	check	Dialog creating INVITE received at ESRP
	5	check	Location URI retrieved from LIS by ESRP
	6	check	LoST request received at ECRF
	7	check	Dialog creating INVITE (LbyR) received at PSAP
	8	check	SIP dialog established
	9	verify	PIDF/LO dereferenced by PSAP
	10	verify	Call connected and location displayed

7.2.7 RT/LBR/03

This test shall verify end-to-end connectivity between UE and PSAP for emergency calls including UC access, NG core services and Location By Reference.

Message Sequence Diagram

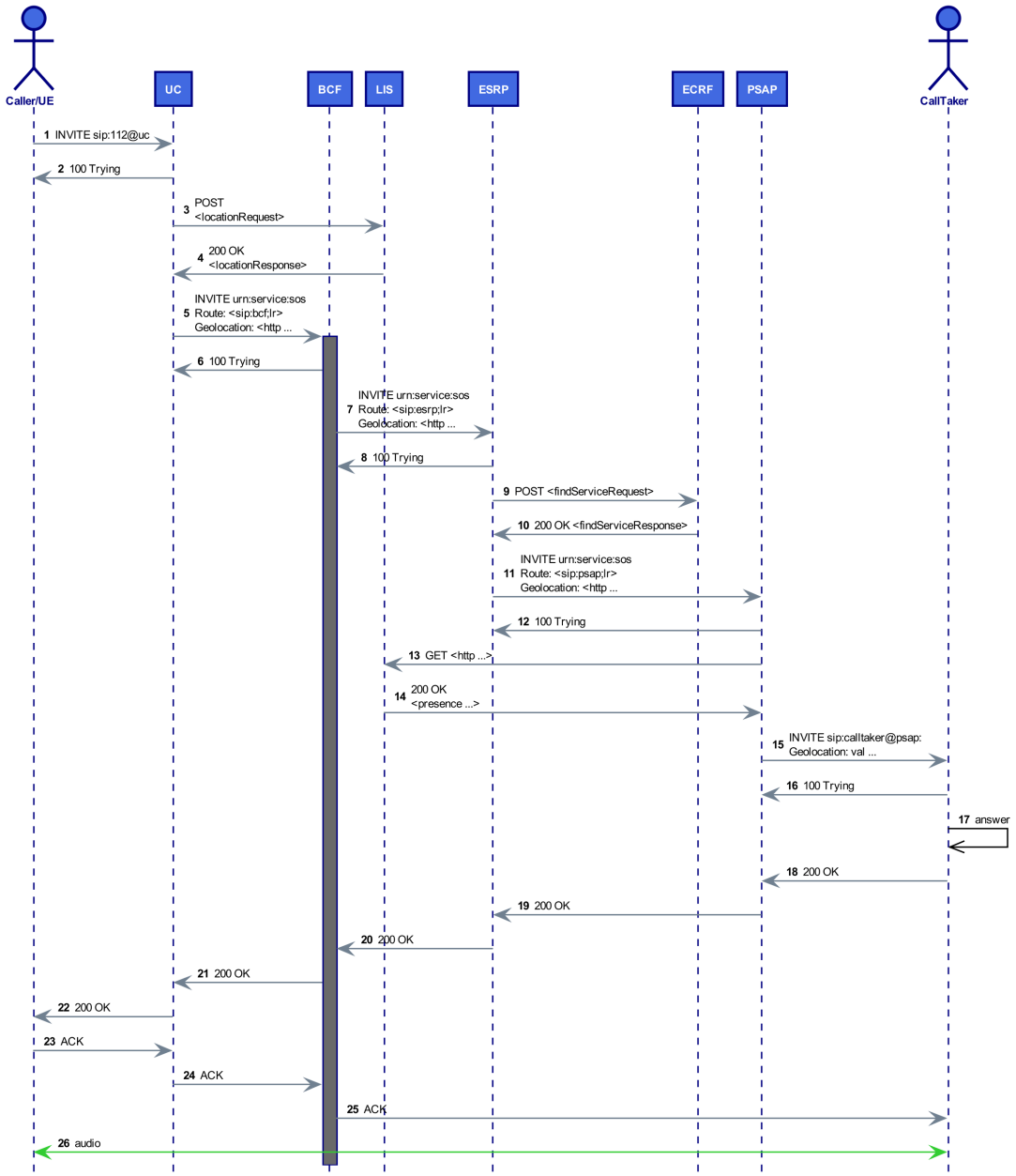

Figure 31: RT/LBR/03 Message Sequence

Message Details

```
3 INVITE SIP Proxy --> BCF

INVITE sip:112@bcf SIP/2.0
Via: SIP/2.0/UDP 10.1.70.21;branch=z9hG4bK7gdfgfhhrf
Via: SIP/2.0/UDP 10.1.12.70;branch=z9hG4bK776asdhds
Max-Forwards: 70
To: <sip:112@provider>
From: Alice <sip:alice@atlanta.com>;tag=1928301774
Call-ID: a84b4c76e66710@10.1.12.70
CSeq: 314159 INVITE
Contact: <sip:alice@10.1.12.70>
Content-Type: application/sdp
...
m=audio 37500 RTP/AVP 0 8
a=rtpmap:0 PCMU/8000
a=rtpmap:8 PCMA/8000
...

7 POST ESRP --> LIS

POST / HTTP/1.1
User-Agent: esrp/2.6.0
Host: 10.1.12.90:8000
Accept: */*
Content-Type: application/held+xml;charset=utf-8
Content-Length: 196

<locationRequest xmlns="urn:ietf:params:xml:ns:geopriv:held" responseTime="8">
  <device xmlns="urn:ietf:params:xml:ns:geopriv:held:id">
    <uri>sip:alice@atlanta.com</uri>
  </device>
</locationRequest>

8 200 OK LIS --> ESRP

HTTP/1.1 200 OK
Server: WOK LIS v0.1
Content-Type: application/held+xml
Content-Length: 979

<?xml version="1.0"?>
<locationResponse xmlns="urn:ietf:params:xml:ns:geopriv:held">
  <locationUriSet expires="2016-02-18T16:47:13+01:00">
    <locationURI>http://10.1.12.90:8000/xcjjwheieif</locationURI>
  </locationUriSet>
  <presence xmlns="urn:ietf:params:xml:ns:pidf" enity="sip:alice@atlanta.com">
    <tuple id="uh12Fwi4">
      <status>
        <geopriv xmlns="urn:ietf:params:xml:ns:pidf:geopriv10">
          <location-info>
            <Point xmlns="http://www.opengis.net/gml" srsName="urn:ogc:crs:EPSG::4326">
              <pos>47.1234 16.0010</pos>
            </Point>
          </location-info>
          <usage-rules xmlns:gbp="urn:ietf:params:xml:ns:pidf:geopriv10:basicPolicy">
            <gbp:retention-expiry>2016-02-18T16:47:13+01:00</gbp:retention-expiry>
          </usage-rules>
          <method>manual</method>
        </geopriv>
      </status>
      <timestamp>2016-02-17T16:47:13+01:00</timestamp>
    </tuple>
  </presence>
</locationResponse>

11 INVITE ESRP --> PSAP

INVITE urn:service.sos SIP/2.0
Via: SIP/2.0/TCP 10.1.21.31;branch=z9hG4bK776asdhds2
Via: SIP/2.0/UDP 10.1.70.21;branch=z9hG4bK7gdfgfhhrf
Via: SIP/2.0/UDP 10.1.12.70;branch=z9hG4bK776asdhds
Route: <sip:psap;lr>
Max-Forwards: 70
To: <sip:112@provider>
From: Alice <sip:alice@atlanta.com>;tag=1928301774
Call-ID: a84b4c76e66710@10.1.12.70
CSeq: 314159 INVITE
Supported: geolocation
Geolocation: <http://10.1.12.90:8000/xcjjwheieif>
Contact: <sip:alice@10.1.12.70>
Call-Info: <urn:eena:callid:a56e556d871.bcf> ;purpose=eena-CallId
Call-Info: <urn:eena:incidentid:a56e556d871> ;purpose=eena-IncidentId
Content-Type: application/sdp
...
m=audio 37500 RTP/AVP 0 8
a=rtpmap:0 PCMU/8000
a=rtpmap:8 PCMA/8000
...
```

```
13 GET PSAP --> LIS

GET /xcjjwheieif HTTP/1.1
User-Agent: psap/2.1.0
Host: 10.1.12.90:8000
Accept: */*

14 200 OK LIS --> PSAP

HTTP/1.1 200 OK
Server: WOK LIS v0.1
Content-Type: application/pidf+xml
Content-Length: 714

<presence xmlns="urn:ietf:params:xml:ns:pidf" enity="sip:alice@atlanta.com">
  <tuple id="uh12Fwi4">
    <status>
      <geopriv xmlns="urn:ietf:params:xml:ns:pidf:geopriv10">
        <location-info>
          <Point xmlns="http://www.opengis.net/gml" srsName="urn:ogc:crs:EPSG::4326">
            <pos>47.1234 16.0010</pos>
          </Point>
        </location-info>
        <usage-rules xmlns:gbp="urn:ietf:params:xml:ns:pidf:geopriv10:basicPolicy">
          <gbp:retention-expiry>2016-02-18T16:47:13+01:00</gbp:retention-expiry>
        </usage-rules>
        <method>manual</method>
      </geopriv>
    </status>
    <timestamp>2016-02-17T16:47:13+01:00</timestamp>
  </tuple>
</presence>
```

Interoperability Test Description

Table 25: RT/LBR/03

Interoperability Test Description			
Identifier	RT/LBR/03		
Test Objective	Veriy connectivity between UE (UC) and PSAP with emergency call including NG core services and Location By Reference		
Configuration	- CFG_NGCS_UC-1 (5.8)		
References	- SIP (n.13) - RTP (n.17) - URN (n.26) - HELD (n.10,n.33,n.35,n.40,n.42) - LoST (n.29,n.30) - LTD (n.1)		
Applicability	- UE_SIP, UE_RTP, UE_G711 (6.2) - UC_SIP, UC_RTP, UC_G711, UC_URN, UC_PFL (6.4) - BCF_SIP, BCF_RTP, BCF_URN, BCF_NGS (6.8) - LIS_HELD (6.9) - ESRP_SIP, ESRP_URN, ESRP_LOST, ESRP_HELD, ESRP_PFL, ESRP_NGS (6.10) - ECRF_LOST, ECRF_PFL (6.11) - PSAP_SIP, PSAP_RTP, PSAP_G711, PSAP_URN, PSAP_HELD, PSAP_PFL, PSAP_NGS (6.12)		
Pre-test conditions	- IP connectivity among all elements of the specific scenario - UE configured to register with UC - UE location manually set (device id: uri) - UC trigger points for emergency call routing (to BCF) - BCF, ESRP trigger points for emergency call routing - ESRP configured to query the ECRF - ECRF configured with correct mapping		
Test Sequence	**Step**	**Type**	**Description**
	1	stimulus	User dials emergency number (e.g. 112)
	2	check	Dialog creating INVITE received at UC domain
	3	check	Location URI retrieved from LIS by UC
	4	check	Dialog creating INVITE (LbyR) received at BCF
	5	check	Dialog creating INVITE (LbyR) received at ESRP
	6	check	LoST request received at ECRF
	7	check	Dialog creating INVITE (LbyR) received at PSAP
	8	check	SIP dialog established
	9	verify	PIDF/LO dereferenced by PSAP
	10	verify	Call connected and location displayed

7.2.8 RT/LBR/04

This test shall verify end-to-end connectivity between UE and PSAP for emergency calls including PIF, NIF, NG core services and Location By Reference.

Message Sequence Diagram

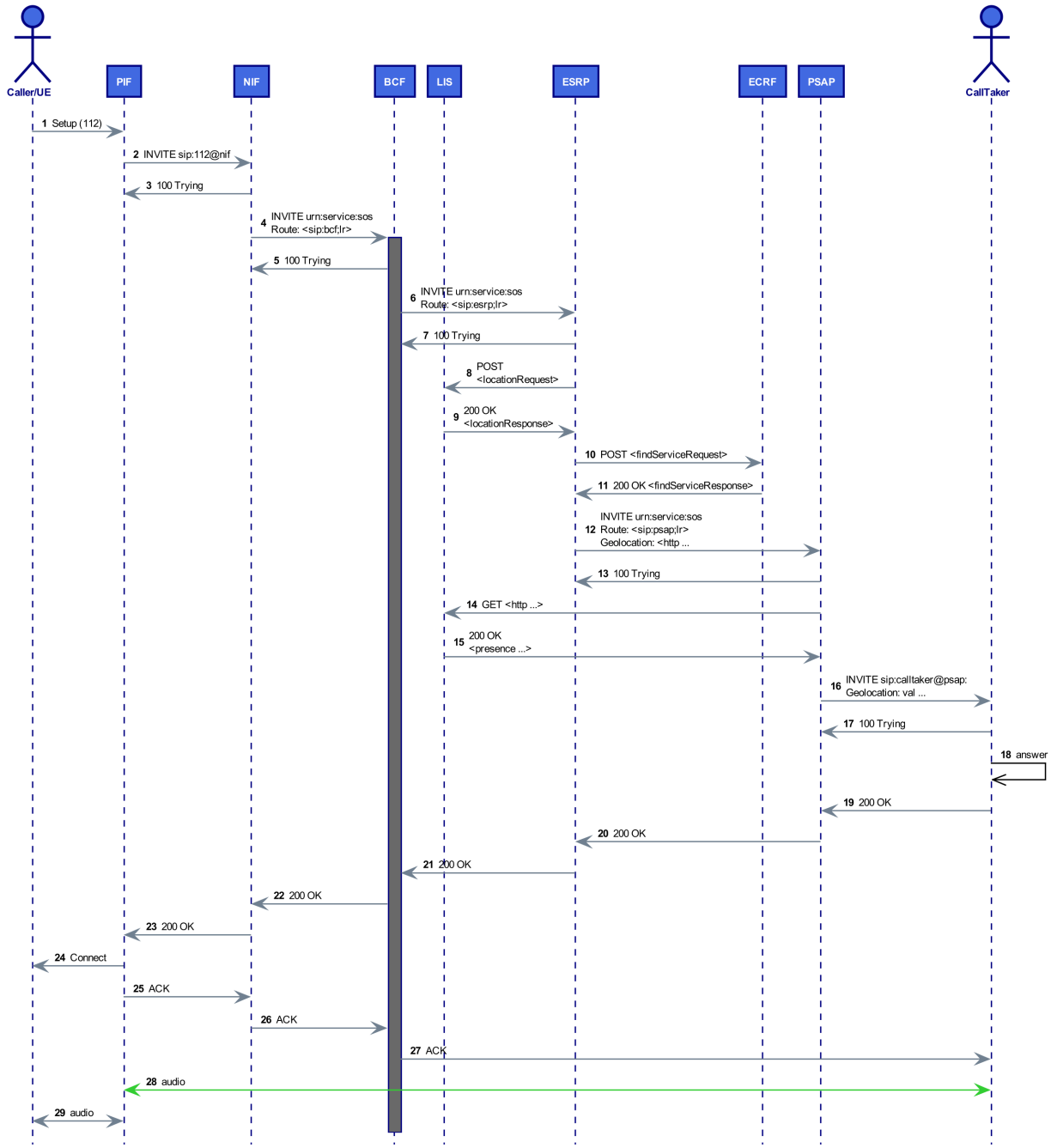

Figure 32: RT/LBR/04 Message Sequence

Message Details

```
6 INVITE NIF --> BCF

INVITE urn:service:sos SIP/2.0
Via: SIP/2.0/UDP 10.1.70.21;branch=z9hG4bK7gdfgfhhrf
Via: SIP/2.0/UDP 10.1.12.70;branch=z9hG4bK776asdhds
Route: <sip:bcf;lr>
Max-Forwards: 70
To: <sip:112@provider>
From: Alice <sip:alice@atlanta.com>;tag=1928301774
Call-ID: a84b4c76e66710@10.1.12.70
CSeq: 314159 INVITE
Contact: <sip:alice@10.1.12.70>
Call-Info: <urn:eena:callid:a56e556d871.bcf> ;purpose=eena-CallId
Call-Info: <urn:eena:incidentid:a56e556d871> ;purpose=eena-IncidentId
Content-Type: application/sdp
...
m=audio 37500 RTP/AVP 0 8
a=rtpmap:0 PCMU/8000
a=rtpmap:8 PCMA/8000
...
```

Interoperability Test Description

Table 26: RT/LBR/04

Interoperability Test Description			
Identifier	RT/LBR/04		
Test Objective	Veriy connectivity between UE (PSTN) and PSAP with emergency call including NG core services and Location By Reference		
Configuration	- CFG_NGCS_PSTN-1 (5.9)		
References	- SIP (n.13) - RTP (n.17) - URN (n.26) - HELD (n.10,n.33,n.35,n.40,n.42) - LoST (n.29,n.30) - LTD (n.1)		
Applicability	- UE_SIP, UE_RTP, UE_G711 (6.2) - PIF_SIP, PIF_RTP, PIF_G711 (6.5) - NIF_SIP, NIF_URN, NIF_NGS (6.6) - BCF_SIP, BCF_RTP, BCF_URN, BCF_NGS (6.8) - LIS_HELD (6.9) - ESRP_SIP, ESRP_URN, ESRP_LOST, ESRP_HELD, ESRP_PFL, ESRP_NGS (6.10) - ECRF_LOST, ECRF_PFL (6.11) - PSAP_SIP, PSAP_RTP, PSAP_G711, PSAP_URN, PSAP_PFL, PSAP_NGS (6.12)		
Pre-test conditions	- IP connectivity among all elements of the specific scenario - UE connected to PIF - UE location manually set (device id: uri) - PIF configured with dial plan for emergency numbers - NIF trigger points for emergency call routing (to BCF) - BCF, ESRP trigger points for emergency call routing - ESRP configured to query the ECRF - ECRF configured with correct mapping		
Test Sequence	**Step**	**Type**	**Description**
	1	stimulus	User dials emergency number (e.g. 112)
	2	check	Dialog creating INVITE received at NIF
	3	check	Dialog creating INVITE received at BCF
	4	check	Dialog creating INVITE received at ESRP
	5	check	Location URI retrieved from LIS by ESRP
	6	check	LoST request received at ECRF
	7	check	Dialog creating INVITE (LbyR) received at PSAP
	8	check	SIP dialog established
	9	verify	PIDF/LO dereferenced by PSAP
	10	verify	Call connected and location displayed

7.3 Media (MM)

7.3.1 MM/VID/01

This test shall verify end-to-end connectivity between UE and PSAP for multimedia emergency calls (audio and video) including IP access and NG core services.

Message Sequence Diagram

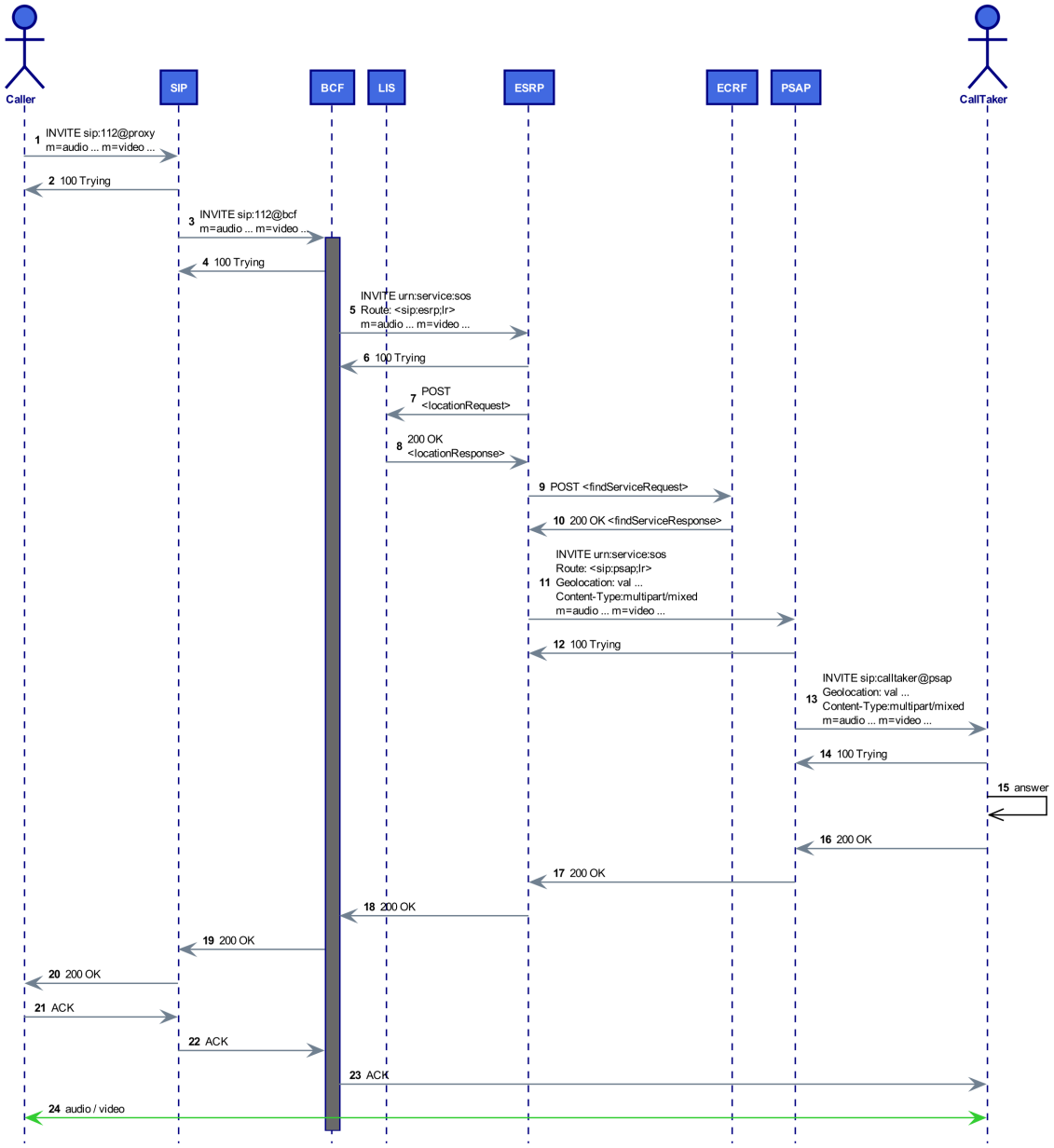

Figure 33: MM/VID/01 Message Sequence

Message Details

```
3 INVITE SIP Proxy --> BCF

INVITE sip:112@bcf SIP/2.0
Via: SIP/2.0/UDP 10.1.70.21;branch=z9hG4bK7gdfgfhhrf
Via: SIP/2.0/UDP 10.1.12.70;branch=z9hG4bK776asdhds
Max-Forwards: 70
To: <sip:112@provider>
From: Alice <sip:alice@atlanta.com>;tag=1928301774
Call-ID: a84b4c76e66710@10.1.12.70
CSeq: 314159 INVITE
Contact: <sip:alice@10.1.12.70>
Content-Type: application/sdp
...
m=audio 5002 RTP/AVP 0 8
a=rtpmap:0 PCMU/8000
a=rtpmap:8 PCMA/8000
...
m=video 5004 RTP/AVP 96
a=rtpmap:96 H264/90000
```

Interoperability Test Description

Table 27: MM/VID/01

Interoperability Test Description			
Identifier	MM/VID/01		
Test Objective	Veriy connectivity between UE (IP) and PSAP with emergency call including NG core services, audio and video		
Configuration	- CFG_NGCS_IP-1 (5.6) - CFG_BASIC_LAB-1 (5.1)		
References	- SIP (n.13) - RTP (n.17) - HELD (n.10,n.33,n.35,n.40,n.42) - LoST (n.29,n.30) - LTD (n.1)		
Applicability	- UE_SIP, UE_RTP, UE_G711, UE_H264 (6.2) - BCF_SIP, BCF_RTP, BCF_URN, BCF_NGS, BCF_HELD, BCF_PFL (6.8) - LIS_HELD (6.9) - ESRP_SIP, ESRP_URN, ESRP_LOST, ESRP_PFL, ESRP_NGS (6.10) - ECRF_LOST, ECRF_PFL (6.11) - PSAP_SIP, PSAP_RTP, PSAP_G711, PSAP_H264, PSAP_URN, PSAP_PFL, PSAP_NGS (6.12)		
Pre-test conditions	- IP connectivity among all elements of the specific scenario - Media anchors support G.711 and H.264 - UE configured to register with SIP Proxy/Registrar - UE location manually set (device id: uri) - Trigger points for emergency call routing - Location By Reference or Location By Value		
Test Sequence	**Step**	**Type**	**Description**
	1	stimulus	User dials emergency number (e.g. 112)
	2	check	Dialog creating INVITE received at BCF
	3	check	Dialog creating INVITE received at ESRP
	4	check	Location URI retrieved from LIS by ESRP
	5	check	LoST request received at ECRF
	6	check	Dialog creating INVITE received at PSAP
	7	check	SIP dialog established
	8	verify	Media (a/v) connected and location displayed

7.3.2 MM/RTT/01

This test shall verify end-to-end connectivity between UE and PSAP for multimedia emergency calls (audio and text) including IP access and NG core services.

Message Sequence Diagram

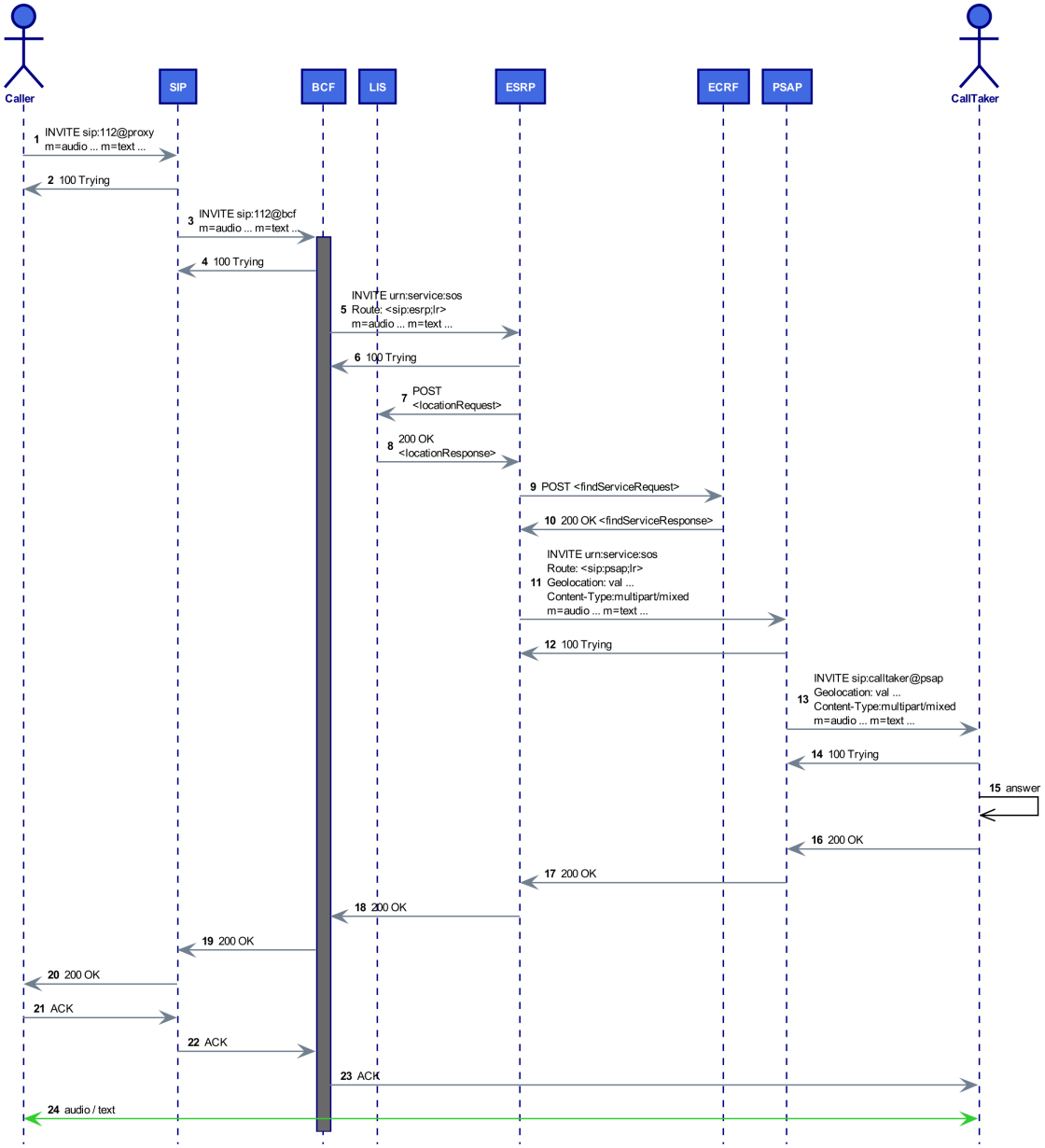

Figure 34: MM/RTT/01 Message Sequence

Message Details

```
3 INVITE SIP Proxy --> BCF

INVITE sip:112@bcf SIP/2.0
Via: SIP/2.0/UDP 10.1.70.21;branch=z9hG4bK7gdfgfhhrf
Via: SIP/2.0/UDP 10.1.12.70;branch=z9hG4bK776asdhds
Max-Forwards: 70
To: <sip:112@provider>
From: Alice <sip:alice@atlanta.com>;tag=1928301774
Call-ID: a84b4c76e66710@10.1.12.70
CSeq: 314159 INVITE
Contact: <sip:alice@10.1.12.70>
Content-Type: application/sdp
...
m=audio 5002 RTP/AVP 0 8
a=rtpmap:0 PCMU/8000
a=rtpmap:8 PCMA/8000
...
m=text 5004 RTP/AVP 98
a=rtpmap:98 t140/1000
```

Interoperability Test Description

Table 28: MM/RTT/01

Interoperability Test Description			
Identifier	MM/RTT/01		
Test Objective	Veriy connectivity between UE (IP) and PSAP with emergency call including NG core services, audio and real-time text		
Configuration	- CFG_NGCS_IP-1 (5.6) - CFG_BASIC_LAB-1 (5.1)		
References	- SIP (n.13) - RTP (n.17) - RTT (n.21) - HELD (n.10,n.33,n.35,n.40,n.42) - LoST (n.29,n.30) - LTD (n.1)		
Applicability	- UE_SIP, UE_RTP, UE_G711, UE_RTT (6.2) - BCF_SIP, BCF_RTP, BCF_URN, BCF_NGS, BCF_HELD, BCF_PFL (6.8) - LIS_HELD (6.9) - ESRP_SIP, ESRP_URN, ESRP_LOST, ESRP_PFL, ESRP_NGS (6.10) - ECRF_LOST, ECRF_PFL (6.11) - PSAP_SIP, PSAP_RTP, PSAP_G711, PSAP_RTT, PSAP_URN, PSAP_PFL, PSAP_NGS (6.12)		
Pre-test conditions	- IP connectivity among all elements of the specific scenario - Media anchors support G.711 and RTT - UE configured to register with SIP Proxy/Registrar - UE location manually set (device id: uri) - Trigger points for emergency call routing - Location By Reference or Location By Value		
Test Sequence	**Step**	**Type**	**Description**
	1	stimulus	User dials emergency number (e.g. 112)
	2	check	Dialog creating INVITE received at BCF
	3	check	Dialog creating INVITE received at ESRP
	4	check	Location URI retrieved from LIS by ESRP
	5	check	LoST request received at ECRF
	6	check	Dialog creating INVITE received at PSAP
	7	check	SIP dialog established
	8	verify	Media (a/t) connected and location displayed

7.3.3 MM/TC/01

This test shall verify end-to-end connectivity between UE and PSAP for multimedia emergency calls (audio, video and text) including IP access and NG core services.

Message Sequence Diagram

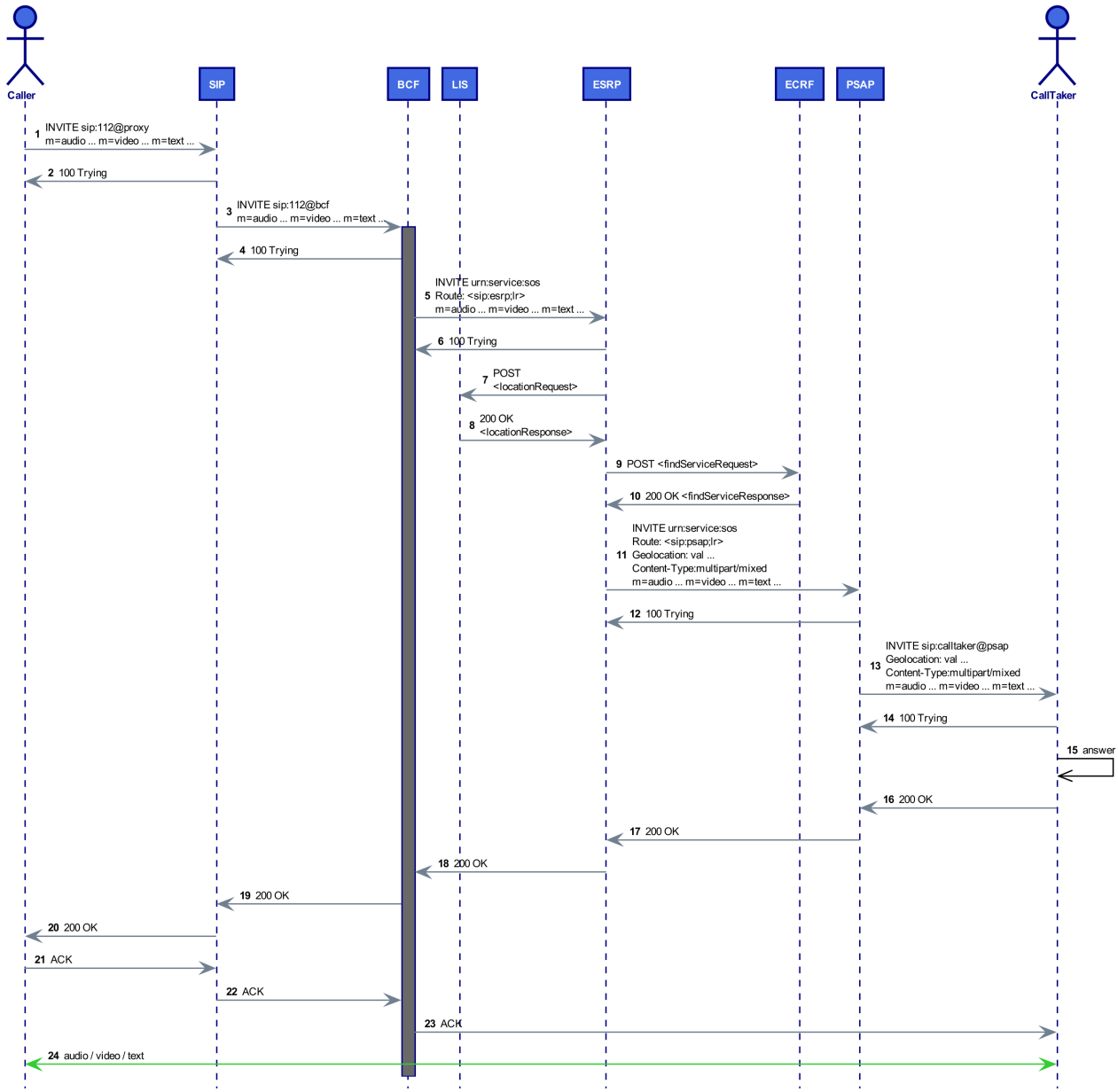

Figure 35: MM/TC/01 Message Sequence

Message Details

```
1 INVITE Caller --> IMS

INVITE urn:service:sos SIP/2.0
Via: SIP/2.0/UDP 10.1.12.70:42592;branch=z9hG4bK846058251
From: Alice <sip:alice@atlanta.com>;tag=1632742163
To: urn:service:sos
Contact: <sip:alice@10.1.12.70:42592;transport=udp>;+g.3gpp.icsi-ref="urn%3Aurn-7%3A3gpp-service.ims.icsi.mmtel"
Call-ID: 3fb8e446f1dc88@10.1.12.70
CSeq: 1725439665 INVITE
Content-Type: multipart/mixed;boundary="d9d9dbcd8e28"
Content-Length: 2290
Max-Forwards: 70
Route: <sip:orig@scscf;lr>
Accept: application/sdp, application/pidf+xml
P-Preferred-Service: urn:urn-7:3gpp-service.ims.icsi.mmtel
Accept-Contact: *;+g.3gpp.icsi-ref="urn%3Aurn-7%3A3gpp-service.ims.icsi.mmtel"
Supported: 100rel,geolocation
Geolocation: <cid:alice@atlanta.com>
Geolocation-Routing: yes
Allow: INVITE, ACK, CANCEL, BYE, MESSAGE, OPTIONS, NOTIFY, PRACK, UPDATE, REFER
Privacy: none
P-Access-Network-Info: 3GPP-E-UTRAN-FDD;utran-cell-id-3gpp=2080172000000649
P-Preferred-Identity: <sip:alice@atlanta.com>
...

--d9d9dbcd8e28
Content-Type: application/sdp

...
m=audio 11550 RTP/AVP 8 0
a=rtpmap:8 PCMA/8000
a=rtpmap:0 PCMU/8000
...
m=video 11552 RTP/AVP 96
a=rtpmap:96 H264/90000
...
m=text 11554 RTP/AVP 98
a=rtpmap:98 t140/1000
...

--d9d9dbcd8e28
Content-Type: application/pidf+xml
Content-ID: alice@atlanta.com

<?xml version="1.0" encoding="utf-8"?>
<presence xmlns="urn:ietf:params:xml:ns:pidf" enity="sip:alice@atlanta.com">
  <tuple id="sg89ae">
    <status>
      <geopriv xmlns="urn:ietf:params:xml:ns:pidf:geopriv10">
        <location-info>
          <Point xmlns="http://www.opengis.net/gml" srsName="urn:ogc:crs:EPSG::4326">
            <pos>47.1234 16.0010</pos>
          </Point>
        </location-info>
        <usage-rules xmlns:gbp="urn:ietf:params:xml:ns:pidf:geopriv10:basicPolicy">
          <gbp:retention-expiry>2016-02-18T16:47:13+01:00</gbp:retention-expiry>
        </usage-rules>
        <method>manual</method>
      </geopriv>
    </status>
    <timestamp>2016-02-17T16:47:13+01:00</timestamp>
  </tuple>
</presence>
--d9d9dbcd8e28--


3 INVITE IMS --> BCF

INVITE urn:service:sos SIP/2.0
Route: <sip:bcf;lr>
To: urn:service:sos
Record-Route: <sip:mo@ecscf;lr>
Record-Route: <sip:mo@pcscf;lr>
Via: SIP/2.0/UDP 10.1.70.24:7060;branch=z9hG4bK34c3bf993
Via: SIP/2.0/UDP 10.1.70.23:4060;branch=z9hG4bK34c313336
Via: SIP/2.0/UDP 10.1.12.70:42592;branch=z9hG4bK846058251
From: Alice <sip:alice@atlanta.com>;tag=1632742163
Contact: <sip:alice@10.1.12.70:42592;transport=udp>;+g.3gpp.icsi-ref="urn%3Aurn-7%3A3gpp-service.ims.icsi.mmtel"
Call-ID: 3fb8e446f1dc88@10.1.12.70
CSeq: 1725439665 INVITE
Content-Type: multipart/mixed;boundary="d9d9dbcd8e28"
Content-Length: 2290
Max-Forwards: 70
Accept: application/sdp, application/pidf+xml
P-Preferred-Service: urn:urn-7:3gpp-service.ims.icsi.mmtel
Accept-Contact: *;+g.3gpp.icsi-ref="urn%3Aurn-7%3A3gpp-service.ims.icsi.mmtel"
Supported: 100rel,geolocation
Geolocation: <cid:alice@atlanta.com>
Geolocation-Routing: yes
```

```
Allow: INVITE, ACK, CANCEL, BYE, MESSAGE, OPTIONS, NOTIFY, PRACK, UPDATE, REFER
Privacy: none
P-Access-Network-Info: 3GPP-E-UTRAN-FDD;utran-cell-id-3gpp=2080172000000649
P-Asserted-Identity: <sip:alice@atlanta.com>
...

--d9d9dbcd8e28
Content-Type: application/sdp

...
m=audio 11550 RTP/AVP 8 0
a=rtpmap:8 PCMA/8000
a=rtpmap:0 PCMU/8000
...
m=video 11552 RTP/AVP 96
a=rtpmap:96 H264/90000
...
m=text 11554 RTP/AVP 98
a=rtpmap:98 t140/1000
...

--d9d9dbcd8e28
Content-Type: application/pidf+xml
Content-ID: alice@atlanta.com

<?xml version="1.0" encoding="utf-8"?>
<presence xmlns="urn:ietf:params:xml:ns:pidf" enity="sip:alice@atlanta.com">
  <tuple id="sg89ae">
    <status>
      <geopriv xmlns="urn:ietf:params:xml:ns:pidf:geopriv10">
        <location-info>
          <Point xmlns="http://www.opengis.net/gml" srsName="urn:ogc:crs:EPSG::4326">
            <pos>47.1234 16.0010</pos>
          </Point>
        </location-info>
        <usage-rules xmlns:gbp="urn:ietf:params:xml:ns:pidf:geopriv10:basicPolicy">
          <gbp:retention-expiry>2016-02-18T16:47:13+01:00</gbp:retention-expiry>
        </usage-rules>
        <method>manual</method>
      </geopriv>
    </status>
    <timestamp>2016-02-17T16:47:13+01:00</timestamp>
  </tuple>
</presence>
--d9d9dbcd8e28--


5 INVITE BCF --> ESRP

INVITE urn:service:sos SIP/2.0
Route: <sip:esrp;lr>
To: urn:service:sos
Via: SIP/2.0/UDP 10.1.70.25;branch=z9hG4bK34c3bf123
From: Alice <sip:alice@atlanta.com>;tag=1632742163
Contact: <sip:alice@10.1.12.70:42592;transport=udp>;+g.3gpp.icsi-ref="urn%3Aurn-7%3A3gpp-service.ims.icsi.mmtel"
Call-ID: 3fb8e446f1dc88@10.1.12.70
CSeq: 1725439665 INVITE
Content-Type: multipart/mixed;boundary="d9d9dbcd8e28"
Content-Length: 2290
Max-Forwards: 70
Accept: application/sdp, application/pidf+xml
Supported: 100rel,geolocation
Geolocation: <cid:alice@atlanta.com>
Geolocation-Routing: yes
Allow: INVITE, ACK, CANCEL, BYE, MESSAGE, OPTIONS, NOTIFY, PRACK, UPDATE, REFER
Privacy: none
P-Asserted-Identity: <sip:alice@atlanta.com>
...

--d9d9dbcd8e28
Content-Type: application/sdp

...
m=audio 11550 RTP/AVP 8 0
a=rtpmap:8 PCMA/8000
a=rtpmap:0 PCMU/8000
...
m=video 11552 RTP/AVP 96
a=rtpmap:96 H264/90000
...
m=text 11554 RTP/AVP 98
a=rtpmap:98 t140/1000
...

--d9d9dbcd8e28
Content-Type: application/pidf+xml
Content-ID: alice@atlanta.com

<?xml version="1.0" encoding="utf-8"?>
<presence xmlns="urn:ietf:params:xml:ns:pidf" enity="sip:alice@atlanta.com">
  <tuple id="sg89ae">
    <status>
```

```
      <geopriv xmlns="urn:ietf:params:xml:ns:pidf:geopriv10">
        <location-info>
          <Point xmlns="http://www.opengis.net/gml" srsName="urn:ogc:crs:EPSG::4326">
            <pos>47.1234 16.0010</pos>
          </Point>
        </location-info>
        <usage-rules xmlns:gbp="urn:ietf:params:xml:ns:pidf:geopriv10:basicPolicy">
          <gbp:retention-expiry>2016-02-18T16:47:13+01:00</gbp:retention-expiry>
        </usage-rules>
        <method>manual</method>
      </geopriv>
    </status>
    <timestamp>2016-02-17T16:47:13+01:00</timestamp>
  </tuple>
</presence>
--d9d9dbcd8e28--
```

Interoperability Test Description

Table 29: MM/TC/01

Interoperability Test Description			
Identifier	MM/TC/01		
Test Objective	Veriy connectivity between UE (IP) and PSAP with emergency call including NG core services and total conversation		
Configuration	- CFG_NGCS_IP-1 (5.6) - CFG_BASIC_LAB-1 (5.1)		
References	- SIP (n.13) - RTP (n.17) - RTT (n.21) - HELD (n.10,n.33,n.35,n.40,n.42) - LoST (n.29,n.30) - LTD (n.1)		
Applicability	- UE_SIP, UE_RTP, UE_G711, UE_H264, UE_RTT (6.2) - BCF_SIP, BCF_RTP, BCF_URN, BCF_NGS, BCF_HELD, BCF_PFL (6.8) - LIS_HELD (6.9) - ESRP_SIP, ESRP_URN, ESRP_LOST, ESRP_PFL, ESRP_NGS (6.10) - ECRF_LOST, ECRF_PFL (6.11) - PSAP_SIP, PSAP_RTP, PSAP_G711, PSAP_H264, PSAP_RTT, PSAP_URN, PSAP_PFL, PSAP_NGS (6.12)		
Pre-test conditions	- IP connectivity among all elements of the specific scenario - Media anchors support G.711, H.264 and RTT - UE configured to register with SIP Proxy/Registrar - UE location manually set (device id: uri) - Trigger points for emergency call routing - Location By Reference or Location By Value		
Test Sequence	**Step**	**Type**	**Description**
	1	stimulus	User dials emergency number (e.g. 112)
	2	check	Dialog creating INVITE received at BCF
	3	check	Dialog creating INVITE received at ESRP
	4	check	Location URI retrieved from LIS by ESRP
	5	check	LoST request received at ECRF
	6	check	Dialog creating INVITE received at PSAP
	7	check	SIP dialog established
	8	verify	Media (a/v/t) connected and location displayed

7.4 Policy (PO)

7.4.1 PO/TIME/01

This test shall verify end-to-end connectivity between UE (IP) and PSAP for emergency calls including IP access, NG core services and routing policies (time).

Message Sequence Diagram

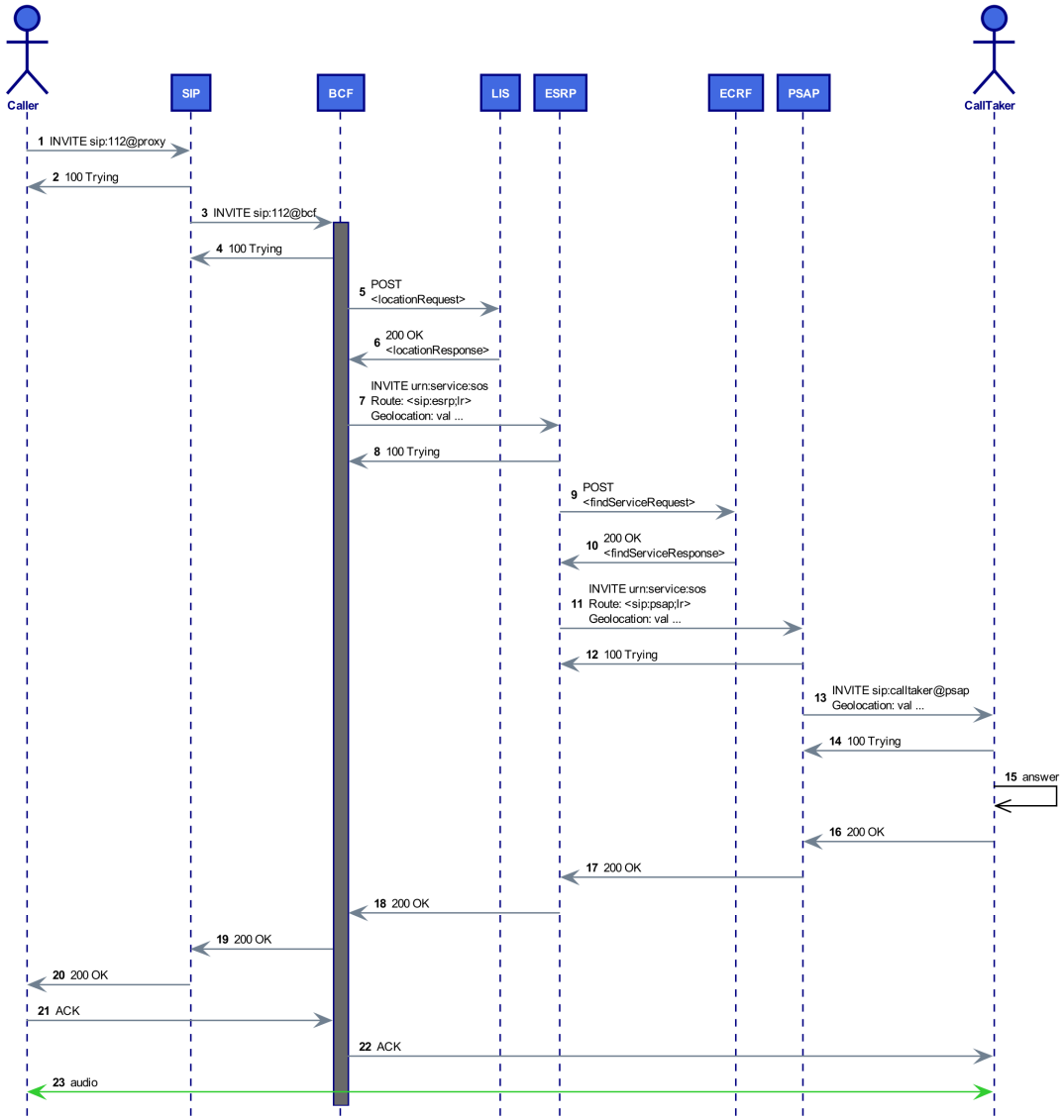

Figure 36: PO/TIME/01 Message Sequence

Message Details

```
3 INVITE SIP Proxy --> BCF

INVITE sip:112@bcf SIP/2.0
Via: SIP/2.0/UDP 10.1.70.21;branch=z9hG4bK7gdfgfhhrf
Via: SIP/2.0/UDP 10.1.12.70;branch=z9hG4bK776asdhds
Max-Forwards: 70
To: <sip:112@provider>
From: Alice <sip:alice@atlanta.com>;tag=1928301774
Call-ID: a84b4c76e66710@10.1.12.70
CSeq: 314159 INVITE
Contact: <sip:alice@10.1.12.70>
Content-Type: application/sdp
...
m=audio 37500 RTP/AVP 0 8
a=rtpmap:0 PCMU/8000
a=rtpmap:8 PCMA/8000
...
```

Interoperability Test Description

Table 30: PO/TIME/01

Interoperability Test Description			
Identifier	PO/TIME/01		
Test Objective	Verify retargeting of emergency call from UE (IP) to PSAP based on matching time-of-day condition including IP access and NG core services		
Configuration	- CFG_NGCS_IP-1 (5.6)		
References	- SIP (n.13) - RTP (n.17) - HELD (n.10,n.33,n.35,n.40,n.42) - LoST (n.29,n.30) - LTD (n.1)		
Applicability	- UE_SIP, UE_RTP, UE_G711 (6.2) - BCF_SIP, BCF_RTP, BCF_URN, BCF_HELD, BCF_PFL, BCF_NGS (6.8) - LIS_HELD (6.9) - ESRP_SIP, ESRP_URN, ESRP_LOST, ESRP_PFL, ESRP_PRF, ESRP_NGS, ESRP_SIPQU, ESRP_DEQU (6.10) - ECRF_LOST, ECRF_PFL (6.11) - PSAP_SIP, PSAP_RTP, PSAP_G711, PSAP_URN, PSAP_PFL, PSAP_NGS, PSAP_SIPQU, PSAP_DEQU (6.12)		
Pre-test conditions	- IP connectivity among all elements of the specific scenario - UE configured to register with SIP Proxy/Registrar - UE location manually set (device id: uri) - Trigger points for emergency call routing - Policy rule set – time-of-day and alternate PSAP		
Test Sequence	**Step**	**Type**	**Description**
	1	stimulus	User dials emergency number (e.g. 112)
	2	check	Dialog creating INVITE received at SIP proxy
	3	check	Dialog creating INVITE received at BCF
	4	check	Dialog creating INVITE received at ESRP
	5	check	LoST request received at ECRF
	6	check	time-of-day state condition matches
	7	check	Dialog creating INVITE received at alternate PSAP
	8	check	SIP dialog established
	9	verify	Call re-targeted and connected

7.4.2 PO/STAT/01

This test shall verify end-to-end connectivity between UE and PSAP for emergency calls including IP access, NG core services and routing policies (queue state).

Message Sequence Diagram

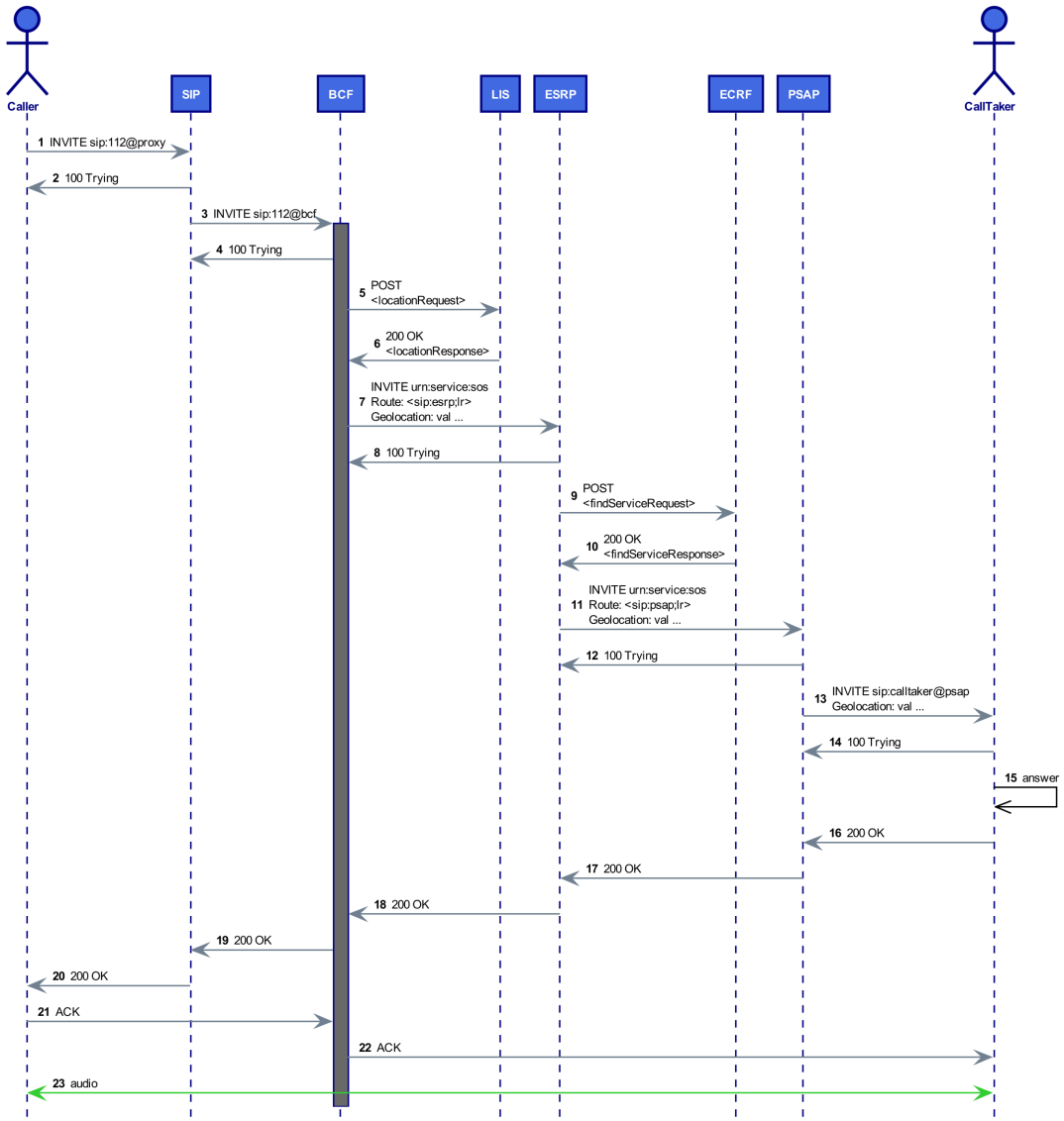

Figure 37: PO/STAT/01 Message Sequence

Message Details

```
3 INVITE SIP Proxy --> BCF

INVITE sip:112@bcf SIP/2.0
Via: SIP/2.0/UDP 10.1.70.21;branch=z9hG4bK7gdfgfhhrf
Via: SIP/2.0/UDP 10.1.12.70;branch=z9hG4bK776asdhds
Max-Forwards: 70
To: <sip:112@provider>
From: Alice <sip:alice@atlanta.com>;tag=1928301774
Call-ID: a84b4c76e66710@10.1.12.70
CSeq: 314159 INVITE
Contact: <sip:alice@10.1.12.70>
Content-Type: application/sdp
...
m=audio 37500 RTP/AVP 0 8
a=rtpmap:0 PCMU/8000
a=rtpmap:8 PCMA/8000
...

7 POST ESRP --> LIS

POST / HTTP/1.1
User-Agent: esrp/2.6.0
Host: 10.1.12.90:8000
Accept: */*
Content-Type: application/held+xml;charset=utf-8
Content-Length: 196

<locationRequest xmlns="urn:ietf:params:xml:ns:geopriv:held" responseTime="8">
  <device xmlns="urn:ietf:params:xml:ns:geopriv:held:id">
    <uri>sip:alice@atlanta.com</uri>
  </device>
</locationRequest>

8 200 OK LIS --> ESRP

HTTP/1.1 200 OK
Server: WOK LIS v0.1
Content-Type: application/held+xml
Content-Length: 979

<?xml version="1.0"?>
<locationResponse xmlns="urn:ietf:params:xml:ns:geopriv:held">
  <locationUriSet expires="2016-02-18T16:47:13+01:00">
    <locationURI>http://10.1.12.90:8000/xcjjwheieif</locationURI>
  </locationUriSet>
  <presence xmlns="urn:ietf:params:xml:ns:pidf" enity="sip:alice@atlanta.com">
    <tuple id="uh12Fwi4">
      <status>
        <geopriv xmlns="urn:ietf:params:xml:ns:pidf:geopriv10">
          <location-info>
            <Point xmlns="http://www.opengis.net/gml" srsName="urn:ogc:crs:EPSG::4326">
              <pos>47.1234 16.0010</pos>
            </Point>
          </location-info>
          <usage-rules xmlns:gbp="urn:ietf:params:xml:ns:pidf:geopriv10:basicPolicy">
            <gbp:retention-expiry>2016-02-18T16:47:13+01:00</gbp:retention-expiry>
          </usage-rules>
          <method>manual</method>
        </geopriv>
      </status>
      <timestamp>2016-02-17T16:47:13+01:00</timestamp>
    </tuple>
  </presence>
</locationResponse>

11 INVITE ESRP --> PSAP

INVITE urn:service.sos SIP/2.0
Via: SIP/2.0/TCP 10.1.21.31;branch=z9hG4bK776asdhds2
Via: SIP/2.0/UDP 10.1.70.21;branch=z9hG4bK7gdfgfhhrf
Via: SIP/2.0/UDP 10.1.12.70;branch=z9hG4bK776asdhds
Route: <sip:psap;lr>
Max-Forwards: 70
To: <sip:112@provider>
From: Alice <sip:alice@atlanta.com>;tag=1928301774
Call-ID: a84b4c76e66710@10.1.12.70
CSeq: 314159 INVITE
Supported: geolocation
Geolocation: <http://10.1.12.90:8000/xcjjwheieif>
Contact: <sip:alice@10.1.12.70>
Call-Info: <urn:eena:callid:a56e556d871.bcf> ;purpose=eena-CallId
Call-Info: <urn:eena:incidentid:a56e556d871> ;purpose=eena-IncidentId
Content-Type: application/sdp
...
m=audio 37500 RTP/AVP 0 8
a=rtpmap:0 PCMU/8000
a=rtpmap:8 PCMA/8000
...
```

```
13 GET PSAP --> LIS

GET /xcjjwheieif HTTP/1.1
User-Agent: psap/2.1.0
Host: 10.1.12.90:8000
Accept: */*

14 200 OK LIS --> PSAP

HTTP/1.1 200 OK
Server: WOK LIS v0.1
Content-Type: application/pidf+xml
Content-Length: 714

<presence xmlns="urn:ietf:params:xml:ns:pidf" enity="sip:alice@atlanta.com">
  <tuple id="uh12Fwi4">
    <status>
      <geopriv xmlns="urn:ietf:params:xml:ns:pidf:geopriv10">
        <location-info>
          <Point xmlns="http://www.opengis.net/gml" srsName="urn:ogc:crs:EPSG::4326">
            <pos>47.1234 16.0010</pos>
          </Point>
        </location-info>
        <usage-rules xmlns:gbp="urn:ietf:params:xml:ns:pidf:geopriv10:basicPolicy">
          <gbp:retention-expiry>2016-02-18T16:47:13+01:00</gbp:retention-expiry>
        </usage-rules>
        <method>manual</method>
      </geopriv>
    </status>
    <timestamp>2016-02-17T16:47:13+01:00</timestamp>
  </tuple>
</presence>
```

Interoperability Test Description

Table 31: PO/STAT/01

Interoperability Test Description			
Identifier	PO/STAT/01		
Test Objective	Verify retargeting of emergency call from UE (IP) to PSAP based on matching queue state condition including IP access and NG core services		
Configuration	- CFG_NGCS_IP-1 (5.6)		
References	- SIP (n.13) - RTP (n.17) - HELD (n.10,n.33,n.35,n.40,n.42) - LoST (n.29,n.30) - LTD (n.1)		
Applicability	- UE_SIP, UE_RTP, UE_G711 (6.2) - BCF_SIP, BCF_RTP, BCF_URN, BCF_HELD, BCF_PFL, BCF_NGS (6.8) - LIS_HELD (6.9) - ESRP_SIP, ESRP_URN, ESRP_LOST, ESRP_PFL, ESRP_PRF, ESRP_NGS, ESRP_SIPQU, ESRP_DEQU (6.10) - ECRF_LOST, ECRF_PFL (6.11) - PSAP_SIP, PSAP_RTP, PSAP_G711, PSAP_URN, PSAP_PFL, PSAP_NGS, PSAP_SIPQU, PSAP_DEQU (6.12)		
Pre-test conditions	- IP connectivity among all elements of the specific scenario - UE configured to register with SIP Proxy/Registrar - UE location manually set (device id: uri) - Trigger points for emergency call routing - Policy rule set – queue state condition		
Test Sequence	**Step**	**Type**	**Description**
	1	stimulus	User dials emergency number (e.g. 112)
	2	check	Dialog creating INVITE received at SIP proxy
	3	check	Dialog creating INVITE received at BCF
	4	check	Dialog creating INVITE received at ESRP
	5	check	LoST request received at ECRF
	6	check	queue state condition matches
	7	check	Dialog creating INVITE received at alternate PSAP
	8	check	SIP dialog established
	9	verify	Call re-targeted and connected

7.4.3 PO/LNG/01

This test shall verify end-to-end connectivity between UE and PSAP for emergency calls including PIF, NIF, NG core services and PIF RTP monitoring features.

Message Sequence Diagram

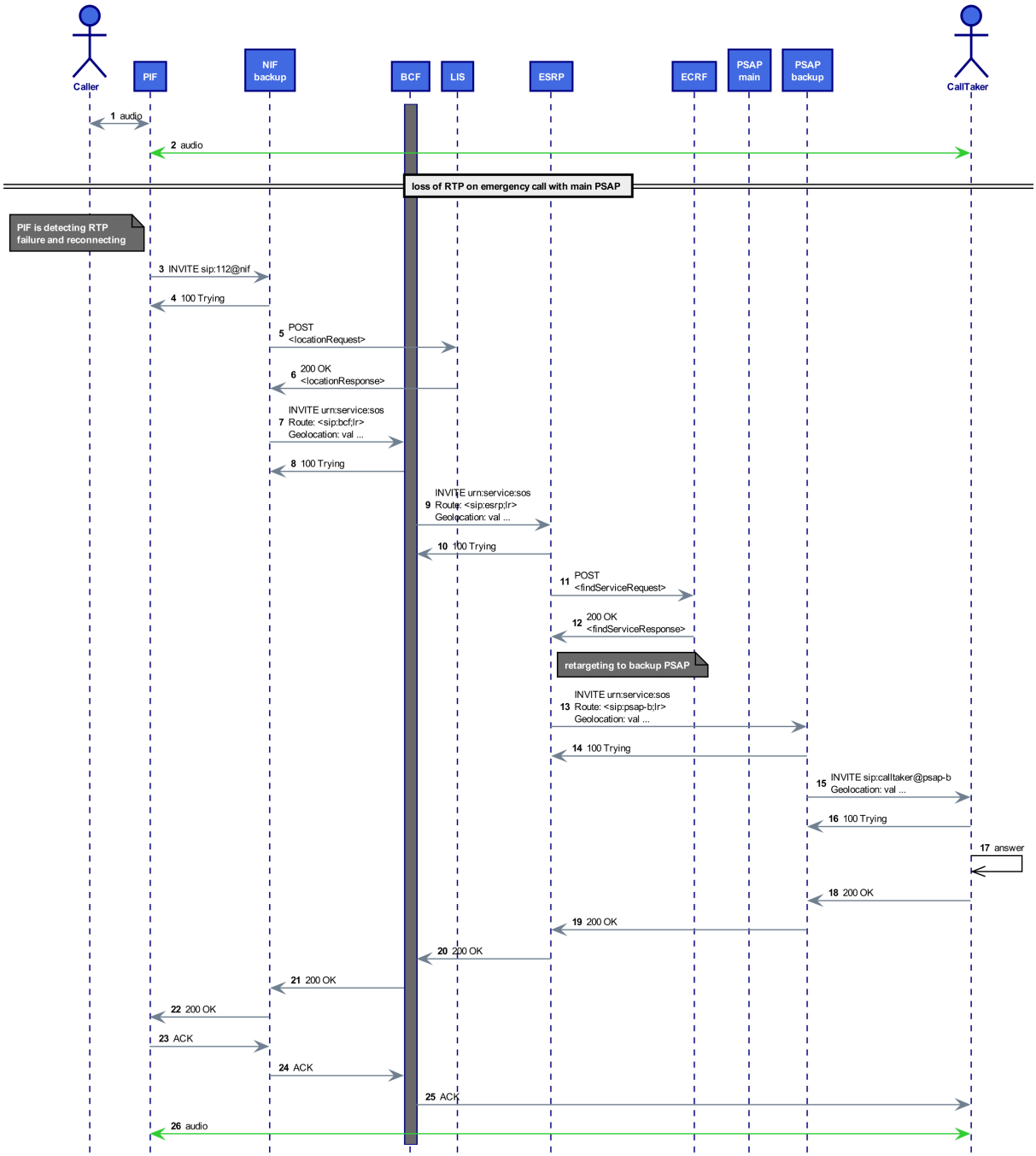

Figure 38: PO/LNG/01 Message Sequence

Message Details

```
6 INVITE NIF --> BCF

INVITE urn:service:sos SIP/2.0
Via: SIP/2.0/UDP 10.1.70.21;branch=z9hG4bK7gdfgfhhrf
Via: SIP/2.0/UDP 10.1.12.70;branch=z9hG4bK776asdhds
Route: <sip:bcf;lr>
Max-Forwards: 70
To: <sip:112@provider>
From: Alice <sip:alice@atlanta.com>;tag=1928301774
Call-ID: a84b4c76e66710@10.1.12.70
CSeq: 314159 INVITE
Contact: <sip:alice@10.1.12.70>
Content-Type: multipart/mixed;boundary="d9d9dbcd8e28"
Content-Length: 2290
Geolocation: <cid:alice@atlanta.com>
...
```

Interoperability Test Description

Table 32: PO/LNG/01

Interoperability Test Description			
Identifier	PO/LNG/01		
Test Objective	Verify call recovery after loss of RTP on emergency call from a legacy UE (PSTN) to PSAP including NG core services		
Configuration	- CFG_NGCS_PSTN-1 (5.9)		
References	- SIP (n.13) - RTP (n.17) - URN (n.26) - HELD (n.10,n.33,n.35,n.40,n.42) - LoST (n.29,n.30) - LTD (n.1)		
Applicability	- UE_SIP, UE_RTP, UE_G711 (6.2) - PIF_SIP, PIF_RTP, PIF_G711 (6.5) - NIF_SIP, NIF_URN, NIF_NGS, NIF_HELD, NIF_PFL (6.6) - BCF_SIP, BCF_RTP, BCF_URN, BCF_NGS (6.8) - LIS_HELD (6.9) - ESRP_SIP, ESRP_URN, ESRP_LOST, ESRP_PFL, ESRP_PRF, ESRP_NGS, ESRP_SIPQU, ESRP_DEQU (6.10) - ECRF_LOST, ECRF_PFL (6.11) - PSAP_SIP, PSAP_RTP, PSAP_G711, PSAP_URN, PSAP_PFL, PSAP_NGS, PSAP_SIPQU, PSAP_DEQU (6.12)		
Pre-test conditions	- IP connectivity among all elements of the specific scenario - UE connected to PIF - UE location manually set (device id: uri) - LNG comprises a main and backup NIF - PIF configured to immediately detect loss of RTP - PIF, NIF trigger points for emergency call routing - ESRP policy rule set – element state and alternate PSAP - Esablished emergency call		
Test Sequence	**Step**	**Type**	**Description**
	1	stimulus	PSAP gets disconnected from network
	2	check	PIF detects loss of RTP and reconnects call
	3	check	Dialog creating INVITE received at backup NIF
	4	check	Location object retrieved from LIS by backup NIF
	5	check	Dialog creating INVITE received at BCF
	6	check	Dialog creating INVITE received at ESRP
	7	check	LoST request received at ECRF
	8	check	Dialog creating INVITE received at backup PSAP
	9	verify	Call connected and location displayed

7.4.4 PO/LNG/02

This test shall verify end-to-end connectivity between UE and PSAP for emergency calls including PIF, NIF, NG core services and PIF SIP monitoring features.

Message Sequence Diagram

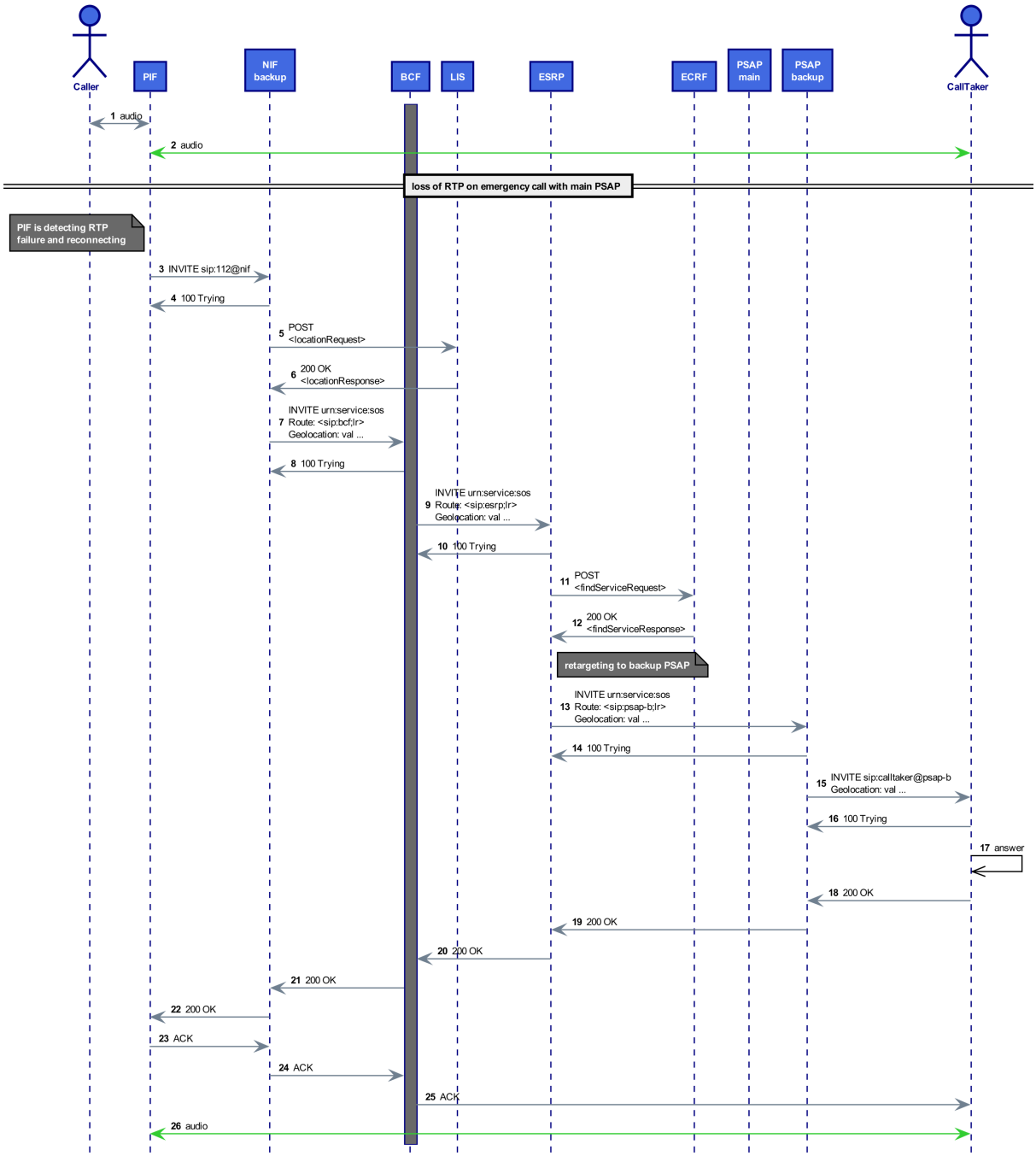

Figure 39: PO/LNG/02 Message Sequence

Message Details

```
6 INVITE NIF --> BCF

INVITE urn:service:sos SIP/2.0
Via: SIP/2.0/UDP 10.1.70.21;branch=z9hG4bK7gdfgfhhrf
Via: SIP/2.0/UDP 10.1.12.70;branch=z9hG4bK776asdhds
Route: <sip:bcf;lr>
Max-Forwards: 70
To: <sip:112@provider>
From: Alice <sip:alice@atlanta.com>;tag=1928301774
Call-ID: a84b4c76e66710@10.1.12.70
CSeq: 314159 INVITE
Contact: <sip:alice@10.1.12.70>
Content-Type: multipart/mixed;boundary="d9d9dbcd8e28"
Content-Length: 2290
Geolocation: <cid:alice@atlanta.com>
...
```

Interoperability Test Description

Table 33: PO/LNG/02

Interoperability Test Description			
Identifier	PO/LNG/02		
Test Objective	Verify call recovery after an unsuccesful SIP dialog setup from a legacy UE (PSTN) to PSAP including NG core services		
Configuration	- CFG_NGCS_PSTN-1 (5.9)		
References	- SIP (n.13) - RTP (n.17) - URN (n.26) - HELD (n.10,n.33,n.35,n.40,n.42) - LoST (n.29,n.30) - LTD (n.1)		
Applicability	- UE_SIP, UE_RTP, UE_G711 (6.2) - PIF_SIP, PIF_RTP, PIF_G711 (6.5) - NIF_SIP, NIF_URN, NIF_NGS, NIF_HELD, NIF_PFL (6.6) - BCF_SIP, BCF_RTP, BCF_URN, BCF_NGS (6.8) - LIS_HELD (6.9) - ESRP_SIP, ESRP_URN, ESRP_LOST, ESRP_PFL, ESRP_PRF, ESRP_NGS, ESRP_SIPQU, ESRP_DEQU (6.10) - ECRF_LOST, ECRF_PFL (6.11) - PSAP_SIP, PSAP_RTP, PSAP_G711, PSAP_URN, PSAP_PFL, PSAP_NGS, PSAP_SIPQU, PSAP_DEQU (6.12)		
Pre-test conditions	- IP connectivity among all elements of the specific scenario - UE connected to PIF - UE location manually set (device id: uri) - LNG comprises a main and backup NIF - PIF configured to immediately detect SIP errors - PIF configured with main and backup NIF - PIF, NIF trigger points for emergency call routing (to BCF) - ESRP policy rule set – element state and alternate PSAP - Esablished emergency call		
Test Sequence	**Step**	**Type**	**Description**
	1	stimulus	PSAP gets disconnected from network
	2	check	PIF detects SIP error and reconnects call
	3	check	Dialog creating INVITE received at backup NIF
	4	check	Location object retrieved from LIS by backup NIF
	5	check	Dialog creating INVITE received at BCF
	6	check	Dialog creating INVITE received at ESRP
	7	check	LoST request received at ECRF
	8	check	Dialog creating INVITE received at backup PSAP
	9	verify	Call connected and location displayed

7.5 Quality (QU)

7.5.1 QU/LOAD/01

This test shall verify end-to-end connectivity between UE (VoLTE) and PSAP for emergency calls including IMS access, NG core services and eNodeB load emulation.

Message Sequence Diagram

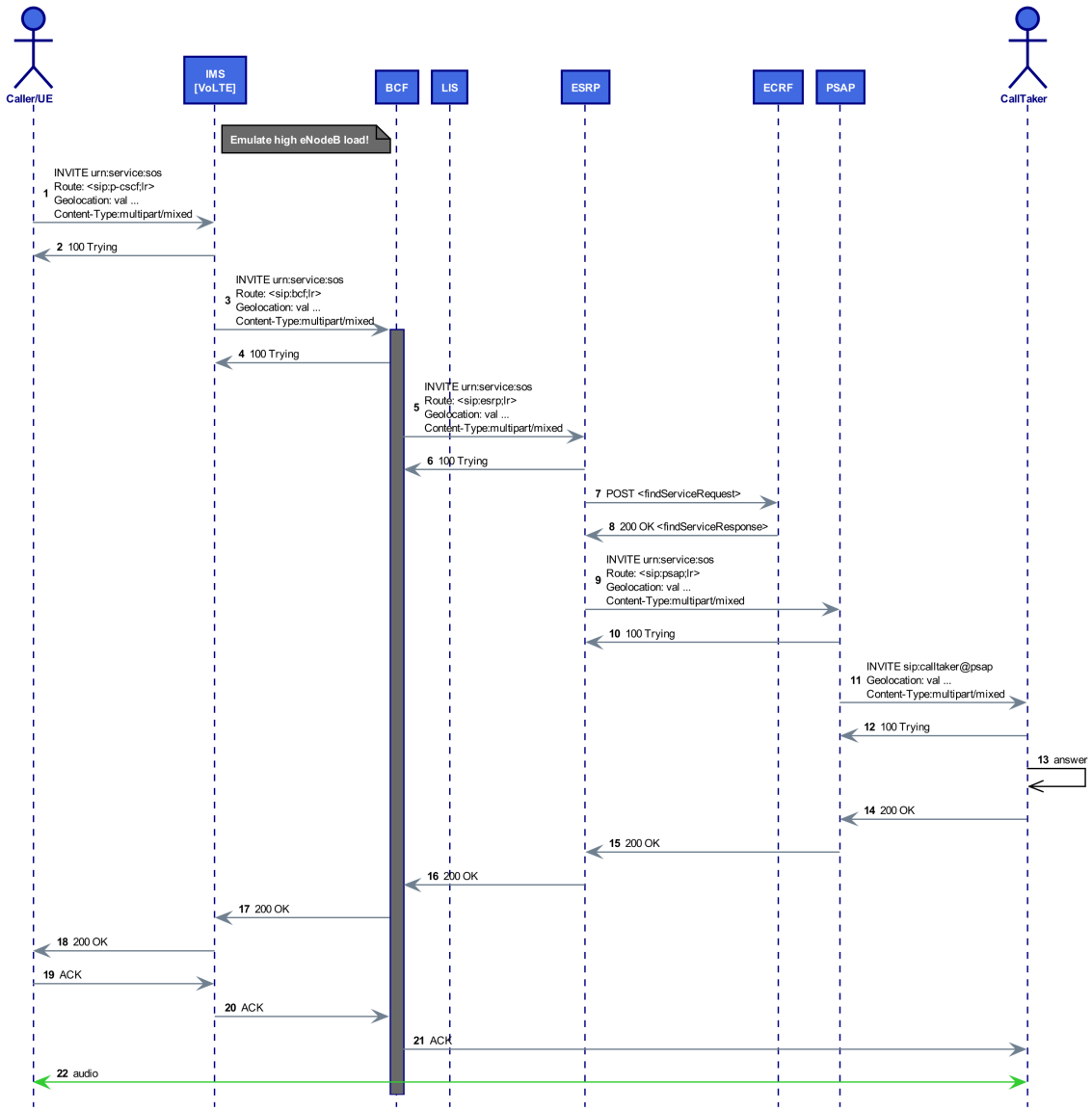

Figure 40: QU/LOAD/01 Message Sequence

Message Details

```
1 INVITE Caller --> IMS

INVITE urn:service:sos SIP/2.0
Via: SIP/2.0/UDP 10.1.12.70:42592;branch=z9hG4bK846058251
From: Alice <sip:alice@atlanta.com>;tag=1632742163
To: urn:service:sos
Contact: <sip:alice@10.1.12.70:42592;transport=udp>;+g.3gpp.icsi-ref="urn%3Aurn-7%3A3gpp-service.ims.icsi.mmtel"
Call-ID: 3fb8e446f1dc88@10.1.12.70
CSeq: 1725439665 INVITE
Content-Type: multipart/mixed;boundary="d9d9dbcd8e28"
Content-Length: 2290
Max-Forwards: 70
Route: <sip:orig@scscf;lr>
Accept: application/sdp, application/pidf+xml
P-Preferred-Service: urn:urn-7:3gpp-service.ims.icsi.mmtel
Accept-Contact: *;+g.3gpp.icsi-ref="urn%3Aurn-7%3A3gpp-service.ims.icsi.mmtel"
Supported: 100rel,geolocation
Geolocation: <cid:alice@atlanta.com>
Geolocation-Routing: yes
Allow: INVITE, ACK, CANCEL, BYE, MESSAGE, OPTIONS, NOTIFY, PRACK, UPDATE, REFER
Privacy: none
P-Access-Network-Info: 3GPP-E-UTRAN-FDD;utran-cell-id-3gpp=2080172000000649
P-Preferred-Identity: <sip:alice@atlanta.com>
...

--d9d9dbcd8e28
Content-Type: application/sdp

...
m=audio 11550 RTP/AVP 8 0
a=rtpmap:0 PCMU/8000
a=rtpmap:8 PCMA/8000
...

--d9d9dbcd8e28
Content-Type: application/pidf+xml
Content-ID: alice@atlanta.com

<?xml version="1.0" encoding="utf-8"?>
<presence xmlns="urn:ietf:params:xml:ns:pidf" xmlns:gp="urn:ietf:params:xml:ns:pidf:geopriv10" xmlns:gml="urn:opengis:
     specification:gml:schema-xsd:feature:v3.0" xmlns="urn:ietf:params:xml:ns:pidf">
<tuple id="sg89ae">
  <status>
   <gp:geopriv>
     <gp:location-info>
       <gml:location>
         <gml:Point gml:id="point1" srsName="epsg:4326">
           <gml:coordinates>43:37:00N 7:03:13E</gml:coordinates>
         </gml:Point>
        </gml:location>
     </gp:location-info>
     <gp:usage-rules>
       <gp:retransmission-allowed>no</gp:retransmission-allowed>
       <gp:retention-expiry>2016-01-11T04:57:29Z</gp:retention-expiry>
     </gp:usage-rules>
   </gp:geopriv>
  </status>
  <timestamp>2016-01-11T20:57:29Z</timestamp>
 </tuple>
</presence>
--d9d9dbcd8e28--


3 INVITE IMS --> BCF

INVITE urn:service:sos SIP/2.0
Route: <sip:bcf;lr>
To: urn:service:sos
Record-Route: <sip:mo@ecscf;lr>
Record-Route: <sip:mo@pcscf;lr>
Via: SIP/2.0/UDP 10.1.70.24:7060;branch=z9hG4bK34c3bf993
Via: SIP/2.0/UDP 10.1.70.23:4060;branch=z9hG4bK34c313336
Via: SIP/2.0/UDP 10.1.12.70:42592;branch=z9hG4bK846058251
From: Alice <sip:alice@atlanta.com>;tag=1632742163
Contact: <sip:alice@10.1.12.70:42592;transport=udp>;+g.3gpp.icsi-ref="urn%3Aurn-7%3A3gpp-service.ims.icsi.mmtel"
Call-ID: 3fb8e446f1dc88@10.1.12.70
CSeq: 1725439665 INVITE
Content-Type: multipart/mixed;boundary="d9d9dbcd8e28"
Content-Length: 2290
Max-Forwards: 70
Accept: application/sdp, application/pidf+xml
P-Preferred-Service: urn:urn-7:3gpp-service.ims.icsi.mmtel
Accept-Contact: *;+g.3gpp.icsi-ref="urn%3Aurn-7%3A3gpp-service.ims.icsi.mmtel"
Supported: 100rel,geolocation
Geolocation: <cid:alice@atlanta.com>
Geolocation-Routing: yes
Allow: INVITE, ACK, CANCEL, BYE, MESSAGE, OPTIONS, NOTIFY, PRACK, UPDATE, REFER
Privacy: none
P-Access-Network-Info: 3GPP-E-UTRAN-FDD;utran-cell-id-3gpp=2080172000000649
```

```
P-Asserted-Identity: <sip:alice@atlanta.com>
...

--d9d9dbcd8e28
Content-Type: application/sdp

...
m=audio 11550 RTP/AVP 8 0
a=rtpmap:0 PCMU/8000
a=rtpmap:8 PCMA/8000
...

--d9d9dbcd8e28
Content-Type: application/pidf+xml
Content-ID: alice@atlanta.com

<?xml version="1.0" encoding="utf-8"?>
<presence xmlns="urn:ietf:params:xml:ns:pidf" xmlns:gp="urn:ietf:params:xml:ns:pidf:geopriv10" xmlns:gml="urn:opengis:
      specification:gml:schema-xsd:feature:v3.0" xmlns="urn:ietf:params:xml:ns:pidf">
<tuple id="sg89ae">
  <status>
   <gp:geopriv>
     <gp:location-info>
       <gml:location>
         <gml:Point gml:id="point1" srsName="epsg:4326">
           <gml:coordinates>43:37:00N 7:03:13E</gml:coordinates>
         </gml:Point>
        </gml:location>
     </gp:location-info>
     <gp:usage-rules>
       <gp:retransmission-allowed>no</gp:retransmission-allowed>
       <gp:retention-expiry>2016-01-11T04:57:29Z</gp:retention-expiry>
     </gp:usage-rules>
   </gp:geopriv>
  </status>
  <timestamp>2016-01-11T20:57:29Z</timestamp>
 </tuple>
</presence>
--d9d9dbcd8e28--


5 INVITE BCF --> ESRP

INVITE urn:service:sos SIP/2.0
Route: <sip:esrp;lr>
To: urn:service:sos
Via: SIP/2.0/UDP 10.1.70.25;branch=z9hG4bK34c3bf123
From: Alice <sip:alice@atlanta.com>;tag=1632742163
Contact: <sip:alice@10.1.12.70:42592;transport=udp>;+g.3gpp.icsi-ref="urn%3Aurn-7%3A3gpp-service.ims.icsi.mmtel"
Call-ID: 3fb8e446f1dc88@10.1.12.70
CSeq: 1725439665 INVITE
Content-Type: multipart/mixed;boundary="d9d9dbcd8e28"
Content-Length: 2290
Max-Forwards: 70
Accept: application/sdp, application/pidf+xml
Supported: 100rel,geolocation
Geolocation: <cid:alice@atlanta.com>
Geolocation-Routing: yes
Allow: INVITE, ACK, CANCEL, BYE, MESSAGE, OPTIONS, NOTIFY, PRACK, UPDATE, REFER
Privacy: none
P-Asserted-Identity: <sip:alice@atlanta.com>
...

--d9d9dbcd8e28
Content-Type: application/sdp

...
m=audio 11550 RTP/AVP 8 0
a=rtpmap:0 PCMU/8000
a=rtpmap:8 PCMA/8000
...

--d9d9dbcd8e28
Content-Type: application/pidf+xml
Content-ID: alice@atlanta.com

<?xml version="1.0" encoding="utf-8"?>
<presence xmlns="urn:ietf:params:xml:ns:pidf" xmlns:gp="urn:ietf:params:xml:ns:pidf:geopriv10" xmlns:gml="urn:opengis:
      specification:gml:schema-xsd:feature:v3.0" xmlns="urn:ietf:params:xml:ns:pidf">
<tuple id="sg89ae">
  <status>
   <gp:geopriv>
     <gp:location-info>
       <gml:location>
         <gml:Point gml:id="point1" srsName="epsg:4326">
           <gml:coordinates>43:37:00N 7:03:13E</gml:coordinates>
         </gml:Point>
        </gml:location>
     </gp:location-info>
     <gp:usage-rules>
       <gp:retransmission-allowed>no</gp:retransmission-allowed>
       <gp:retention-expiry>2016-01-11T04:57:29Z</gp:retention-expiry>
```

```
      </gp:usage-rules>
    </gp:geopriv>
   </status>
   <timestamp>2016-01-11T20:57:29Z</timestamp>
  </tuple>
</presence>
--d9d9dbcd8e28--
```

Interoperability Test Description

Table 34: QU/LOAD/01

Interoperability Test Description			
Identifier	QU/LOAD/01		
Test Objective	End-to-end connectivity and emergency call from UE to PSAP including NG core services, IMS and eNodeB load emulation		
Configuration	- CFG_NGCS_IMS-1 (5.7)		
References	- SIP (n.13) - RTP (n.17) - URN (n.26) - HELD (n.10,n.33,n.35,n.40,n.42) - LoST (n.29,n.30) - LTD (n.1)		
Applicability	- UE_SIP, UE_RTP, UE_G711, UE_URN, UE_PFL (6.2) - IMS_SIP, IMS_RTP, IMS_URN, IMS_PFL (6.3) - BCF_SIP, BCF_RTP, BCF_URN, BCF_NGS, BCF_PFL (6.8) - ESRP_SIP, ESRP_URN, ESRP_LOST, ESRP_PFL, ESRP_NGS (6.10) - ECRF_LOST, ECRF_PFL (6.11) - PSAP_SIP, PSAP_RTP, PSAP_G711, PSAP_URN, PSAP_PFL, PSAP_NGS (6.12)		
Pre-test conditions	- IP connectivity among all elements of the specific scenario - UE configured to register with the IMS domain - IMS trigger points for emergency call routing (to BCF) - BCF configured to forward calls to ESRP - ESRP configured with ECRF (NAPTR or SRV) - ECRF configured with correct mapping - RAN load emulation enabled and configured		
Test Sequence	**Step**	**Type**	**Description**
	1	stimulus	RAN load emulation started
	2	stimulus	User dials emergency number
	3	check	Dialog creating INVITE received at IMS domain
	4	check	Dialog creating INVITE received at BCF
	5	check	Location object received in INVITE at BCF
	6	check	Dialog creating INVITE received at ESRP
	7	check	LoST request received at ECRF
	8	check	Dialog creating INVITE received at PSAP
	9	check	SIP dialog established
	10	verify	Location received at PSAP
	11	verify	Call connected and media exchanged
	12	verify	Location displayed

7.5.2 QU/LOAD/02

This test shall verify end-to-end connectivity between UE and PSAP for emergency calls including IP access (IMS/OTT), NG core services and eNodeB load emulation.

Message Sequence Diagram

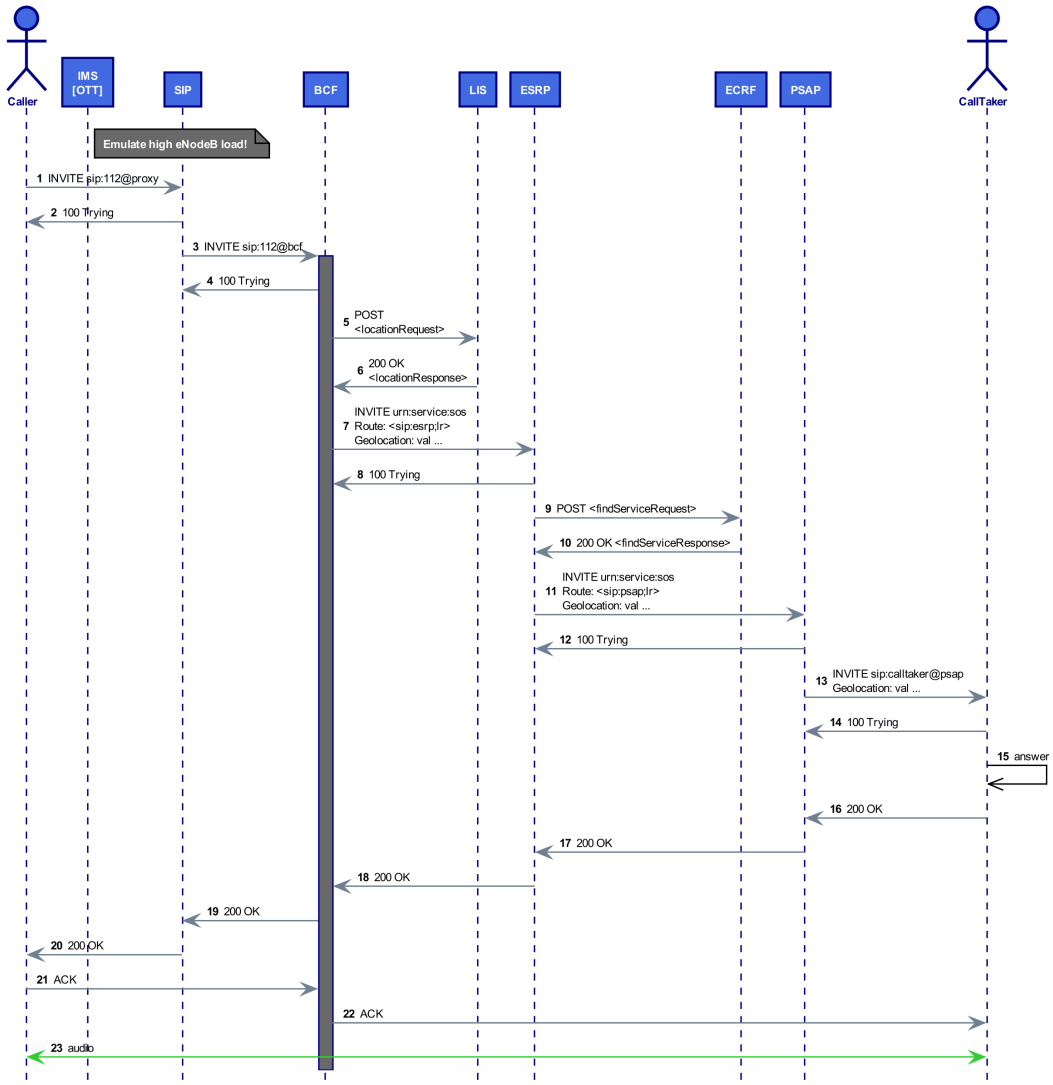

Figure 41: QU/LOAD/02 Message Sequence

Message Details

```
1 INVITE Caller --> IMS

INVITE urn:service:sos SIP/2.0
Via: SIP/2.0/UDP 10.1.12.70:42592;branch=z9hG4bK846058251
From: Alice <sip:alice@atlanta.com>;tag=1632742163
To: urn:service:sos
Contact: <sip:alice@10.1.12.70:42592;transport=udp>;+g.3gpp.icsi-ref="urn%3Aurn-7%3A3gpp-service.ims.icsi.mmtel"
Call-ID: 3fb8e446f1dc88@10.1.12.70
CSeq: 1725439665 INVITE
Content-Type: multipart/mixed;boundary="d9d9dbcd8e28"
Content-Length: 2290
Max-Forwards: 70
Route: <sip:orig@scscf;lr>
Accept: application/sdp, application/pidf+xml
P-Preferred-Service: urn:urn-7:3gpp-service.ims.icsi.mmtel
Accept-Contact: *;+g.3gpp.icsi-ref="urn%3Aurn-7%3A3gpp-service.ims.icsi.mmtel"
Supported: 100rel,geolocation
Geolocation: <cid:alice@atlanta.com>
Geolocation-Routing: yes
Allow: INVITE, ACK, CANCEL, BYE, MESSAGE, OPTIONS, NOTIFY, PRACK, UPDATE, REFER
Privacy: none
P-Access-Network-Info: 3GPP-E-UTRAN-FDD;utran-cell-id-3gpp=2080172000000649
P-Preferred-Identity: <sip:alice@atlanta.com>
...

--d9d9dbcd8e28
Content-Type: application/sdp

...
m=audio 11550 RTP/AVP 8 0
a=rtpmap:0 PCMU/8000
a=rtpmap:8 PCMA/8000
...

--d9d9dbcd8e28
Content-Type: application/pidf+xml
Content-ID: alice@atlanta.com

<?xml version="1.0" encoding="utf-8"?>
<presence xmlns="urn:ietf:params:xml:ns:pidf" xmlns:gp="urn:ietf:params:xml:ns:pidf:geopriv10" xmlns:gml="urn:opengis:
     specification:gml:schema-xsd:feature:v3.0" xmlns="urn:ietf:params:xml:ns:pidf">
<tuple id="sg89ae">
  <status>
   <gp:geopriv>
     <gp:location-info>
       <gml:location>
         <gml:Point gml:id="point1" srsName="epsg:4326">
           <gml:coordinates>43:37:00N 7:03:13E</gml:coordinates>
         </gml:Point>
        </gml:location>
     </gp:location-info>
     <gp:usage-rules>
       <gp:retransmission-allowed>no</gp:retransmission-allowed>
       <gp:retention-expiry>2016-01-11T04:57:29Z</gp:retention-expiry>
     </gp:usage-rules>
   </gp:geopriv>
  </status>
  <timestamp>2016-01-11T20:57:29Z</timestamp>
 </tuple>
</presence>
--d9d9dbcd8e28--


3 INVITE IMS --> BCF

INVITE urn:service:sos SIP/2.0
Route: <sip:bcf;lr>
To: urn:service:sos
Record-Route: <sip:mo@ecscf;lr>
Record-Route: <sip:mo@pcscf;lr>
Via: SIP/2.0/UDP 10.1.70.24:7060;branch=z9hG4bK34c3bf993
Via: SIP/2.0/UDP 10.1.70.23:4060;branch=z9hG4bK34c313336
Via: SIP/2.0/UDP 10.1.12.70:42592;branch=z9hG4bK846058251
From: Alice <sip:alice@atlanta.com>;tag=1632742163
Contact: <sip:alice@10.1.12.70:42592;transport=udp>;+g.3gpp.icsi-ref="urn%3Aurn-7%3A3gpp-service.ims.icsi.mmtel"
Call-ID: 3fb8e446f1dc88@10.1.12.70
CSeq: 1725439665 INVITE
Content-Type: multipart/mixed;boundary="d9d9dbcd8e28"
Content-Length: 2290
Max-Forwards: 70
Accept: application/sdp, application/pidf+xml
P-Preferred-Service: urn:urn-7:3gpp-service.ims.icsi.mmtel
Accept-Contact: *;+g.3gpp.icsi-ref="urn%3Aurn-7%3A3gpp-service.ims.icsi.mmtel"
Supported: 100rel,geolocation
Geolocation: <cid:alice@atlanta.com>
Geolocation-Routing: yes
Allow: INVITE, ACK, CANCEL, BYE, MESSAGE, OPTIONS, NOTIFY, PRACK, UPDATE, REFER
Privacy: none
P-Access-Network-Info: 3GPP-E-UTRAN-FDD;utran-cell-id-3gpp=2080172000000649
```

```
P-Asserted-Identity: <sip:alice@atlanta.com>
...

--d9d9dbcd8e28
Content-Type: application/sdp

...
m=audio 11550 RTP/AVP 8 0
a=rtpmap:0 PCMU/8000
a=rtpmap:8 PCMA/8000
...

--d9d9dbcd8e28
Content-Type: application/pidf+xml
Content-ID: alice@atlanta.com

<?xml version="1.0" encoding="utf-8"?>
<presence xmlns="urn:ietf:params:xml:ns:pidf" xmlns:gp="urn:ietf:params:xml:ns:pidf:geopriv10" xmlns:gml="urn:opengis:
      specification:gml:schema-xsd:feature:v3.0" xmlns="urn:ietf:params:xml:ns:pidf">
<tuple id="sg89ae">
  <status>
   <gp:geopriv>
     <gp:location-info>
       <gml:location>
         <gml:Point gml:id="point1" srsName="epsg:4326">
           <gml:coordinates>43:37:00N 7:03:13E</gml:coordinates>
         </gml:Point>
        </gml:location>
     </gp:location-info>
     <gp:usage-rules>
       <gp:retransmission-allowed>no</gp:retransmission-allowed>
       <gp:retention-expiry>2016-01-11T04:57:29Z</gp:retention-expiry>
     </gp:usage-rules>
   </gp:geopriv>
  </status>
  <timestamp>2016-01-11T20:57:29Z</timestamp>
 </tuple>
</presence>
--d9d9dbcd8e28--


5 INVITE BCF --> ESRP

INVITE urn:service:sos SIP/2.0
Route: <sip:esrp;lr>
To: urn:service:sos
Via: SIP/2.0/UDP 10.1.70.25;branch=z9hG4bK34c3bf123
From: Alice <sip:alice@atlanta.com>;tag=1632742163
Contact: <sip:alice@10.1.12.70:42592;transport=udp>;+g.3gpp.icsi-ref="urn%3Aurn-7%3A3gpp-service.ims.icsi.mmtel"
Call-ID: 3fb8e446f1dc88@10.1.12.70
CSeq: 1725439665 INVITE
Content-Type: multipart/mixed;boundary="d9d9dbcd8e28"
Content-Length: 2290
Max-Forwards: 70
Accept: application/sdp, application/pidf+xml
Supported: 100rel,geolocation
Geolocation: <cid:alice@atlanta.com>
Geolocation-Routing: yes
Allow: INVITE, ACK, CANCEL, BYE, MESSAGE, OPTIONS, NOTIFY, PRACK, UPDATE, REFER
Privacy: none
P-Asserted-Identity: <sip:alice@atlanta.com>
...

--d9d9dbcd8e28
Content-Type: application/sdp

...
m=audio 11550 RTP/AVP 8 0
a=rtpmap:0 PCMU/8000
a=rtpmap:8 PCMA/8000
...

--d9d9dbcd8e28
Content-Type: application/pidf+xml
Content-ID: alice@atlanta.com

<?xml version="1.0" encoding="utf-8"?>
<presence xmlns="urn:ietf:params:xml:ns:pidf" xmlns:gp="urn:ietf:params:xml:ns:pidf:geopriv10" xmlns:gml="urn:opengis:
      specification:gml:schema-xsd:feature:v3.0" xmlns="urn:ietf:params:xml:ns:pidf">
<tuple id="sg89ae">
  <status>
   <gp:geopriv>
     <gp:location-info>
       <gml:location>
         <gml:Point gml:id="point1" srsName="epsg:4326">
           <gml:coordinates>43:37:00N 7:03:13E</gml:coordinates>
         </gml:Point>
        </gml:location>
     </gp:location-info>
     <gp:usage-rules>
       <gp:retransmission-allowed>no</gp:retransmission-allowed>
       <gp:retention-expiry>2016-01-11T04:57:29Z</gp:retention-expiry>
```

```
      </gp:usage-rules>
    </gp:geopriv>
   </status>
   <timestamp>2016-01-11T20:57:29Z</timestamp>
  </tuple>
</presence>
--d9d9dbcd8e28--
```

Interoperability Test Description

Table 35: QU/LOAD/02

Interoperability Test Description			
Identifier	QU/LOAD/02		
Test Objective	End-to-end connectivity and emergency call from UE (IP) to PSAP including IP access, NG core services, IMS and eNodeB load emulation		
Configuration	- CFG_NGCS_IP-1 (5.6)		
References	- SIP (n.13) - RTP (n.17) - URN (n.26) - HELD (n.10,n.33,n.35,n.40,n.42) - LoST (n.29,n.30) - LTD (n.1)		
Applicability	- UE_SIP, UE_RTP, UE_G711, UE_URN, UE_PFL (6.2) - IMS_SIP, IMS_RTP, IMS_URN, IMS_PFL (6.3) - BCF_SIP, BCF_RTP, BCF_URN, BCF_NGS, BCF_PFL (6.8) - ESRP_SIP, ESRP_URN, ESRP_LOST, ESRP_PFL, ESRP_NGS (6.10) - ECRF_LOST, ECRF_PFL (6.11) - PSAP_SIP, PSAP_RTP, PSAP_G711, PSAP_URN, PSAP_PFL, PSAP_NGS (6.12)		
Pre-test conditions	- IP connectivity among all elements of the specific scenario - UE configured to register with the IMS domain - IMS trigger points for emergency call routing (to BCF) - BCF configured to forward calls to ESRP - ESRP configured with ECRF (NAPTR or SRV) - ECRF configured with correct mapping - RAN load emulation enabled and configured		
Test Sequence	**Step**	**Type**	**Description**
	1	stimulus	RAN load emulation started
	2	stimulus	User dials emergency number
	3	check	Dialog creating INVITE received at IMS domain
	4	check	Dialog creating INVITE received at BCF
	5	check	Location object received in INVITE at BCF
	6	check	Dialog creating INVITE received at ESRP
	7	check	LoST request received at ECRF
	8	check	Dialog creating INVITE received at PSAP
	9	check	SIP dialog established
	10	verify	Location received at PSAP
	11	verify	Call connected and media exchanged
	12	verify	Location displayed

Document Revision History

Rev.	Date	Section(s)	Cause of Change	Implemented
0.1	2015-12-05	all	new doc	W. Kampichler
0.2	2015-12-15	all	edits	W. Kampichler
0.3	2016-01-04	5,6,7	edits	W. Kampichler
0.4	2016-01-13	6,7	edits	W. Kampichler
0.5	2016-01-25	6,7	edits	W. Kampichler
0.6	2016-02-10	1,5,6,7	edits	W. Kampichler
0.7	2016-02-17	all	edits	W. Kampichler
1.0	2016-02-22	all	edits	W. Kampichler
1.1	2016-03-02	1,7	edits	W. Kampichler
1.2	2016-04-20	acknowledgements	edits	W. Kampichler

Acknowledgements

ETSI recognizes the following industry experts and their companies for their contributions in development of this document.

Name	Company
Philippe Badia	Com4Innov
Ian Colville	Aculab
David Grant	Aculab
Michael Hartrey	Voltdelta
Gunnar Hellstrom	Omnitor
Fidel Liberal	UPV/EHU
Chris Loutsaris	Aculab
Sebastian Mueller	ETSI CTI
Mikel Ramos	UPV/EHU
Gerasimos Tzanetatos	Unify